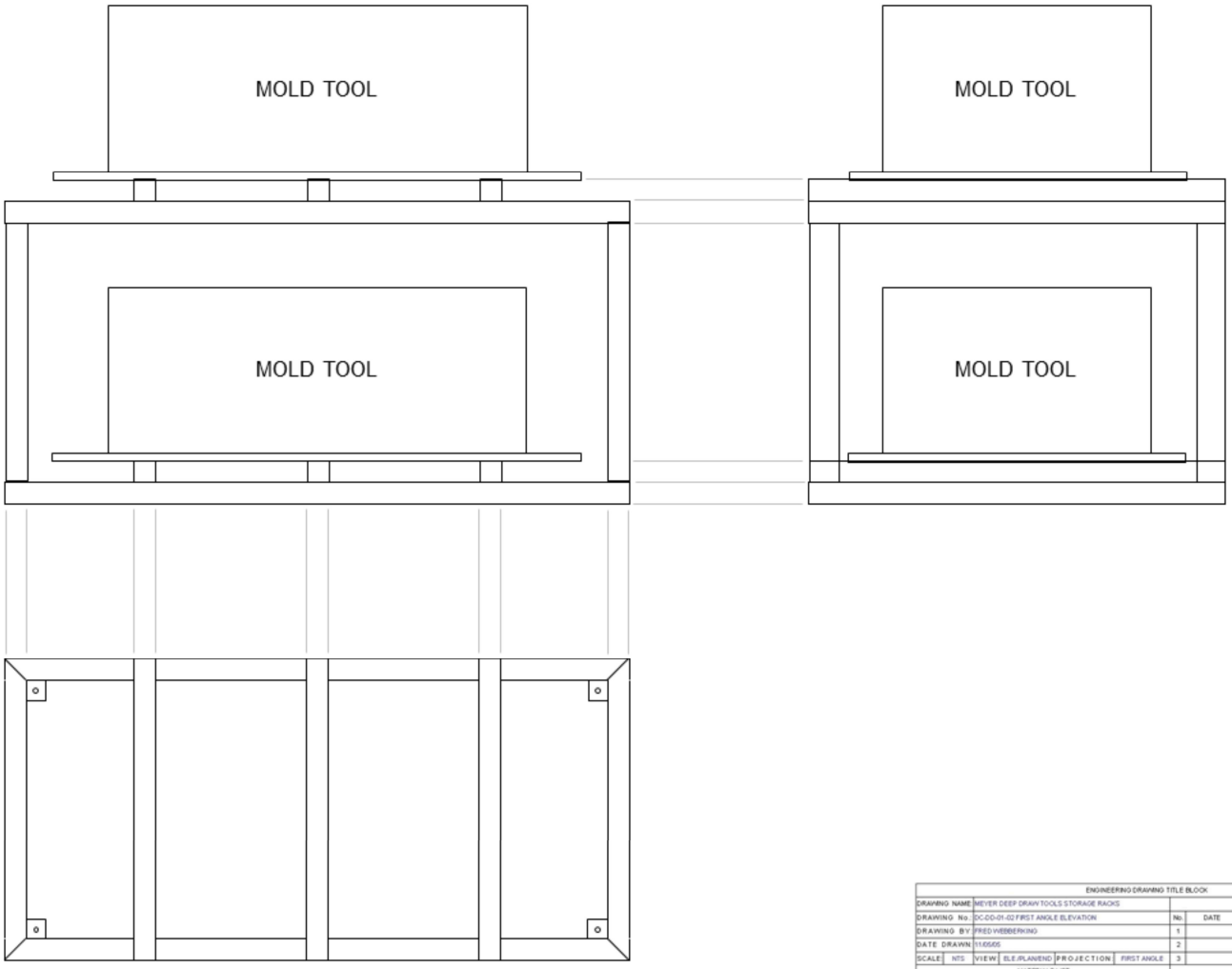

ENGINEERING DRAWING TITLE BLOCK

DRAWING NAME	MEYER DEEP DRAW TOOLS STORAGE RACKS	REVISIONS		
DRAWING No.	DC-DD-01-02 FIRST ANGLE ELEVATION	No.	DATE	
DRAWING BY	FRED WEBBERKING	1		
DATE DRAWN	11/05/05	2		
SCALE NTS	VIEW ELE/PLAN/END	PROJECTION FIRST ANGLE	3	

MATERIALS LIST		TOLERANCES
500'	A6 STRUCTURAL & SUPPORT MATERIAL 6"X 6" X 1/2" SQUARE TUBING	DECIMAL
4	6"x6"x1/2" ANCHOR PLATES	FRACTIONAL
15	GALLONS OF STANKIEWICZ COMPANY BLUE METAL PAINT	ANGLUAR

NOTES:

The first 10 slides are a series of drawings that I produced as a first draft for a fabrication job for mold tool storage racks. One of my major projects with a former employer was SMED tool changeover and set up time reduction for deep draw vacuum forming machines.

The current state was that the molding tools - weighing up to 1.5 tons - were stored on the floor jacked up on 4”X4” wooden long blocks. Aside from taking up a large footprint of floor space - there were 10 mold tools - this simply was not a good engineering practice, not to mention 5S practice of handling and storing these very expensive mold tools.

My future state was to design and fabricate 5 two shelved storage racks to set in order the mold tools. After some design reviews the picture below shows one of the finished racks in use. $27,000.00 thousand dollars to have 5 made and yes, that included shipping and handling.

Cont.

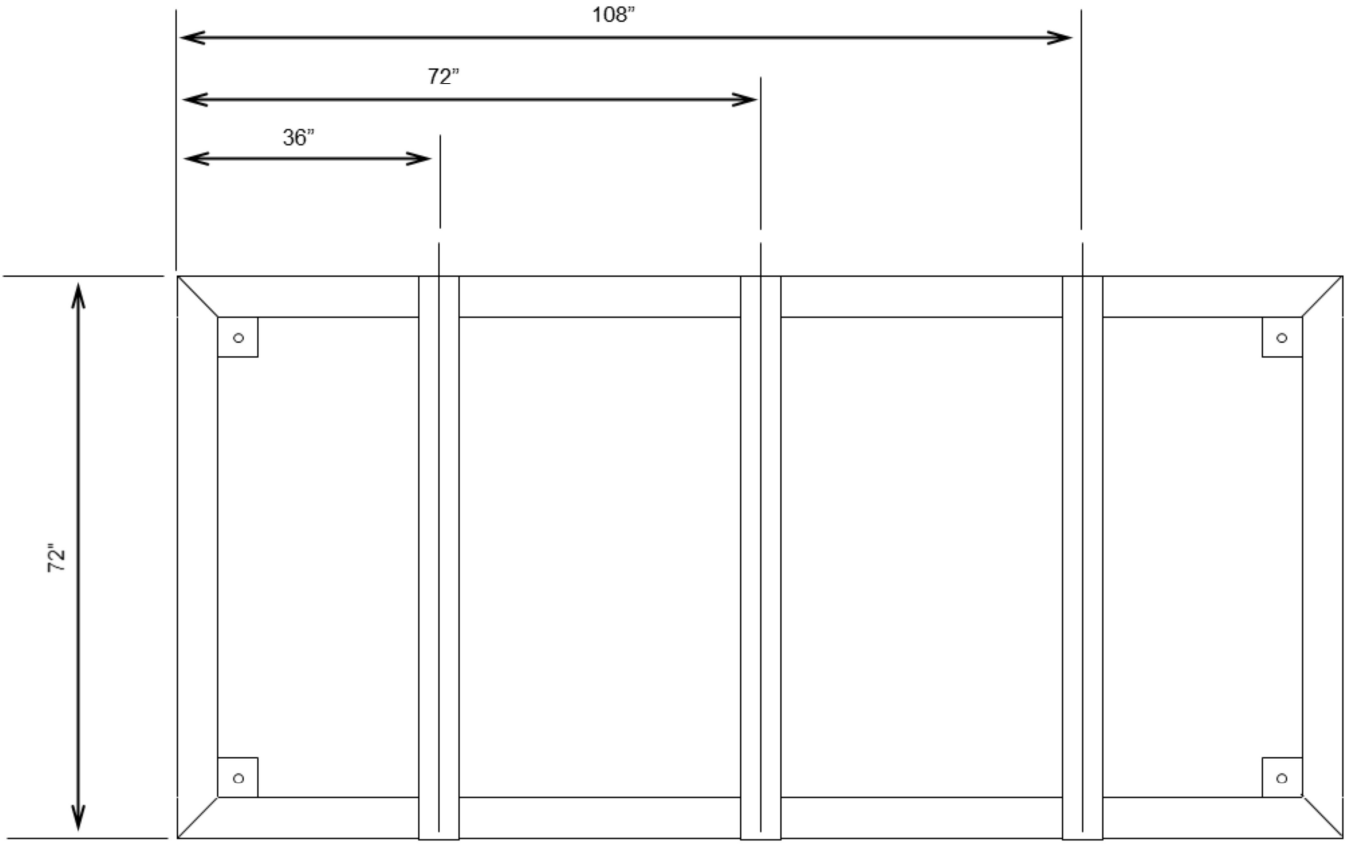

ENGINEERING DRAWING TITLE BLOCK							
DRAWING NAME:	MEYER DEEP DRAW TOOLS STORAGE RACKS			REVISIONS			
DRAWING No.:	DC-DD-01-02 PLAN DIMENSIONS			No.	DATE		
DRAWING BY:	FRED WEBBERKING			1			
DATE DRAWN:	11.05.05			2			
SCALE:	NTS	VIEW:	PLAN	PROJECTION:	FIRST ANGLE	3	
MATERIALS LIST						TOLERANCES	
500'	All STRUCTURAL & SUPPORT MATERIAL 6"X 6" X 1/2" SQUARE TUBING			DECIMAL			
4	6"x6"x1/2" ANCHOR PLATES			FRACTIONAL			
15	GALLONS OF STANKIEWICZ COMPANY BLUE METAL PAINT			ANGLUAR			
NOTES:							

I drew this in first angle projection - plan view.

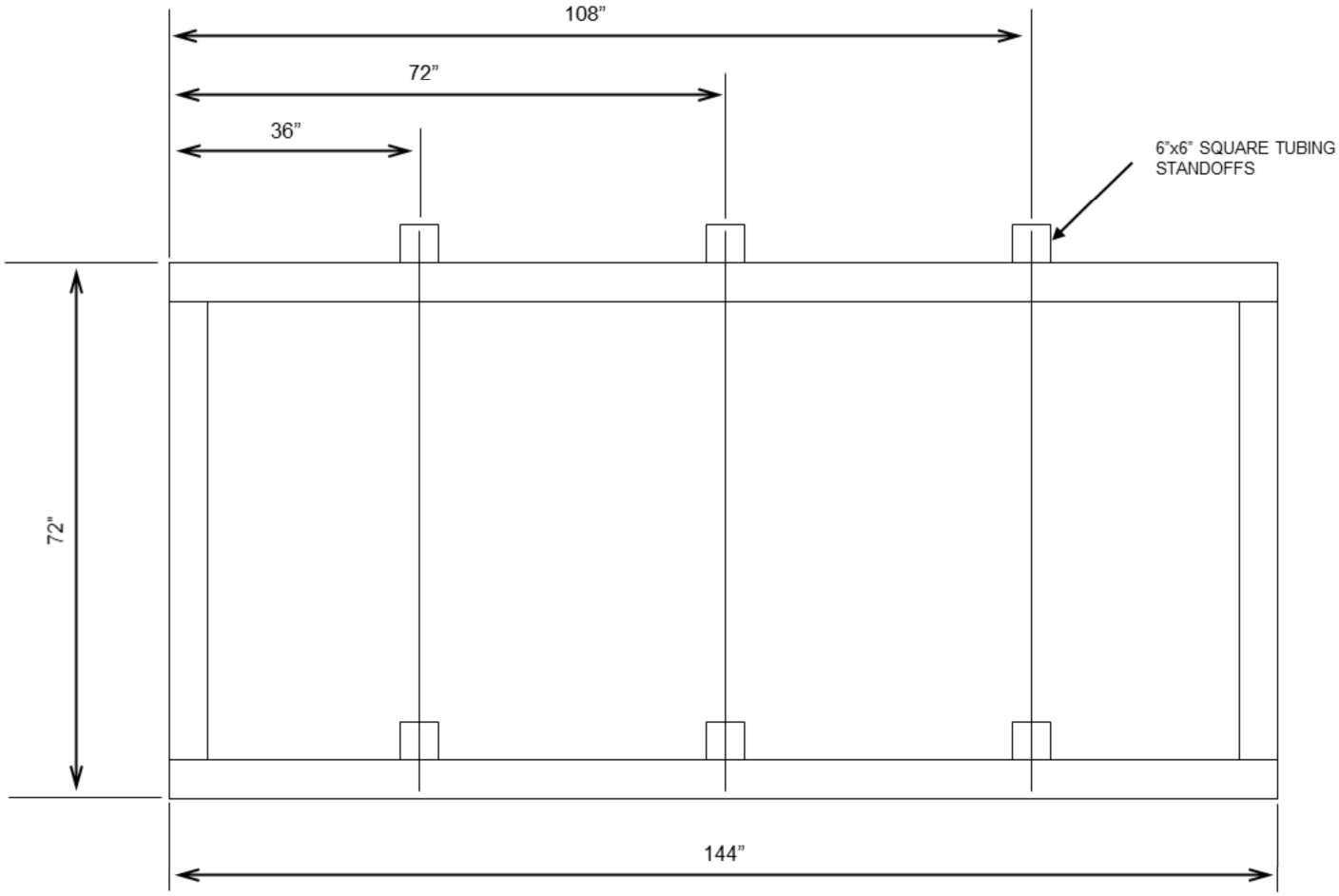

ENGINEERING DRAWING TITLE BLOCK					
DRAWING NAME	MEYER DEEP DRAW TOOLS STORAGE RACKS		REVISIONS		
DRAWING No.	DC-DD-01-02 ELEVATION DIMENSIONS		No.	DATE	
DRAWING BY	FRED WEBBER/KING		1		
DATE DRAWN	11.05.05		2		
SCALE	NTS	VIEW: ELEVATION	PROJECTION	FIRST ANGLE	3

MATERIALS LIST		TOLERANCES	
500'	All STRUCTURAL & SUPPORT MATERIAL 6"X 6" X ½" SQUARE TUBING	DECIMAL	
4	6"x6"x1/2" ANCHOR PLATES	FRACTIONAL	
15	GALLONS OF STANKIEWICZ COMPANY BLUE METAL PAINT	ANGLUAR	
NOTES:			

I drew this in first angle projection - elevation view.

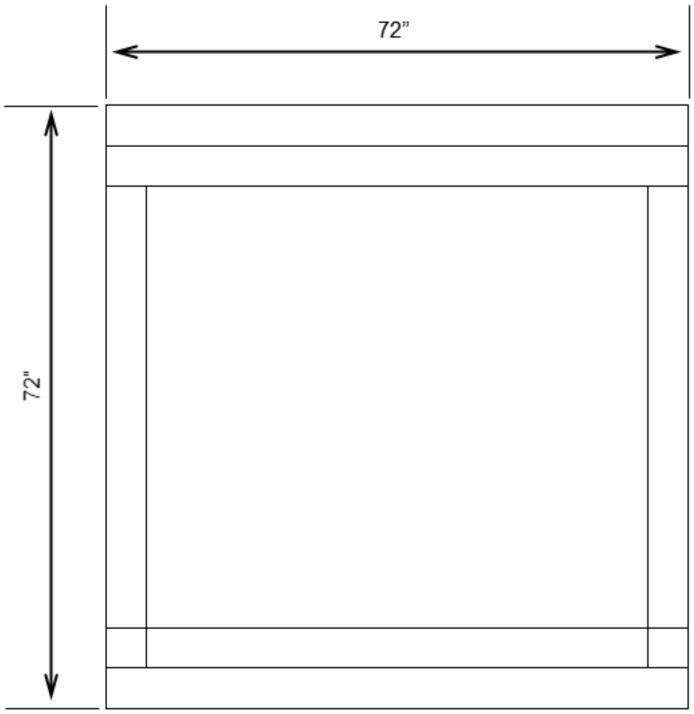

ENGINEERING DRAWING TITLE BLOCK							
DRAWING NAME	MEYER DEEP DRAW TOOLS STORAGE RACKS			REVISIONS			
DRAWING No.	DC-DD-01-02 END DIMENSIONS			No.	DATE		
DRAWING BY	FRED WEBBERKING			1			
DATE DRAWN	11/05/05			2			
SCALE	NTS	VIEW	END	PROJECTION	FIRST ANGLE	3	
MATERIALS LIST						TOLERANCES	
500'	All STRUCTURAL & SUPPORT MATERIAL 6"X 6" X 1/2" SQUARE TUBING			DECIMAL			
4	6"x6"x1/2" ANCHOR PLATES			FRACTIONAL			
15	GALLONS OF STANKIEWICZ COMPANY BLUE METAL PAINT			ANGLUAR			
NOTES:							

I drew this in first angle projection - end view.

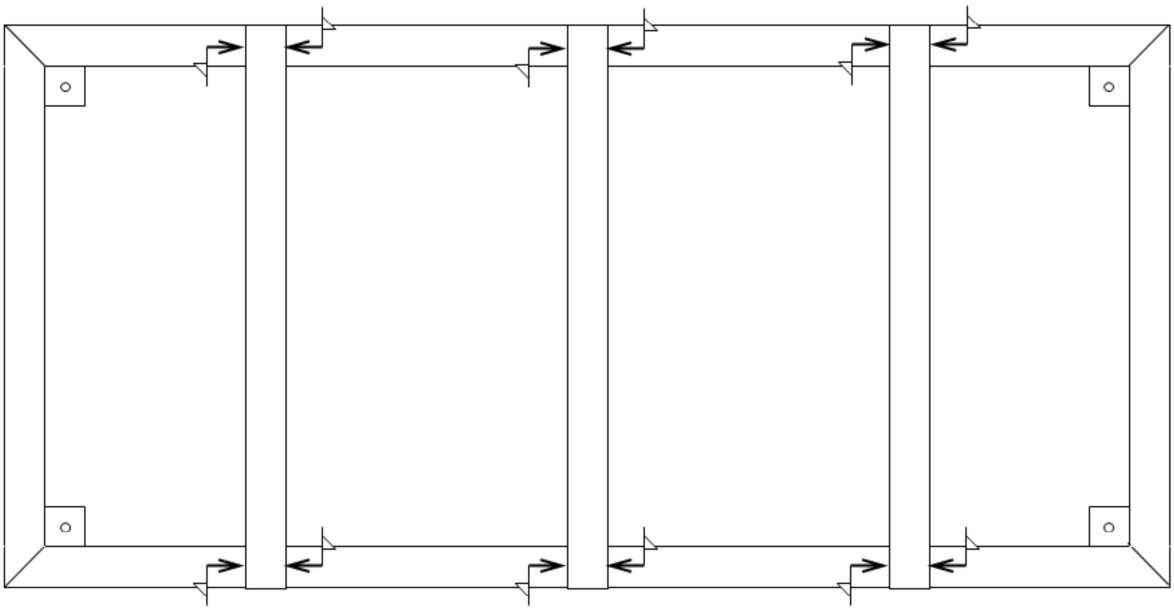

ENGINEERING DRAWING TITLE BLOCK					
DRAWING NAME	MEYER DEEP DRAW TOOLS STORAGE RACKS			REVISIONS	
DRAWING No.	DC-DD-01-02 WELDING JOINTS			No.	DATE
DRAWING BY	FRED WEBBERKING			1	
DATE DRAWN	11/05/05			2	
SCALE	NTS	VIEW	ELEVATION	PROJECTION	FIRST ANGLE
				3	

MATERIALS LIST		TOLERANCES	
500'	All STRUCTURAL & SUPPORT MATERIAL 6"X 6" X 10' SQUARE TUBING	DECIMAL	
4	6"x6"x1/2" ANCHOR PLATES	FRACTIONAL	
15	GALLONS OF STANKIEWICZ COMPANY BLUE METAL PAINT	ANGLUAR	
NOTES:			

I drew this in first angle projection - auxiliary views for welding joints.

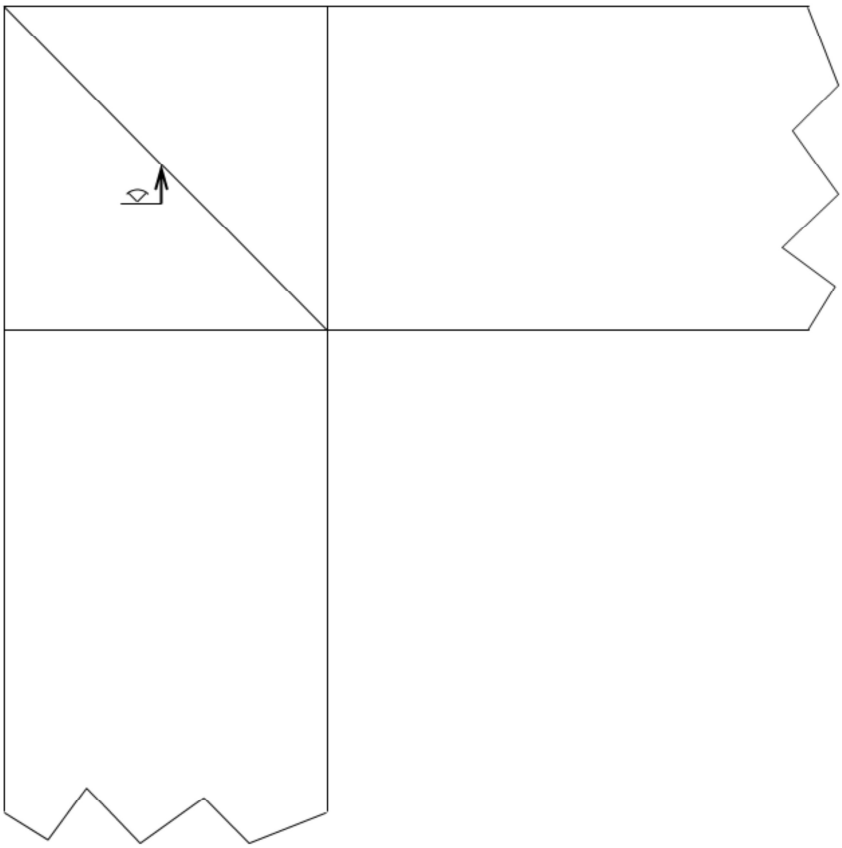

ENGINEERING DRAWING TITLE BLOCK							
DRAWING NAME	MEVER TOOLS STORAGE RACKS WELDING JOINTS				REVISIONS		
DRAWING No.	DC-DD-01-02 ANCHOR PLATES				No.	DATE	
DRAWING BY	FRED WEBBERKING				1		
DATE DRAWN	11/05/05				2		
SCALE	NTS	VIEW	PLAN	PROJECTION	FIRST ANGLE	3	
MATERIALS LIST						TOLERANCES	
4	6"X 6" X ½" MILD STEET PLATES					DECIMAL	
						FRACTIONAL	
						ANGLUAR	
NOTES:	TOP & BOTTOM ON THE 4 CORNER JOINTS CUT AND WELDED 45° FOR INCREASE STRENGTH						

I drew this in first angle projection - auxiliary views for welding joints.

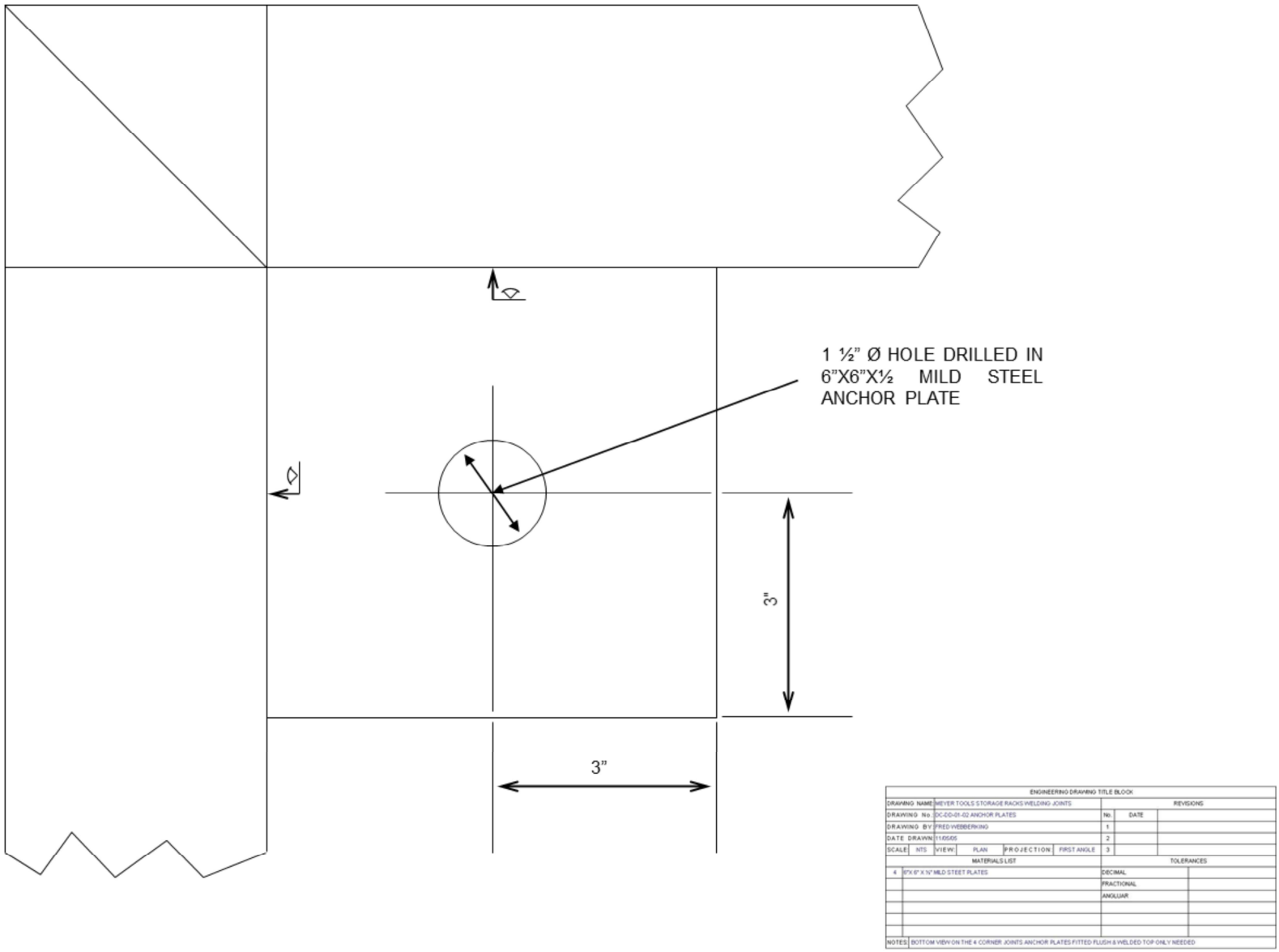

I drew this in first angle projection - auxiliary views for welding joints.

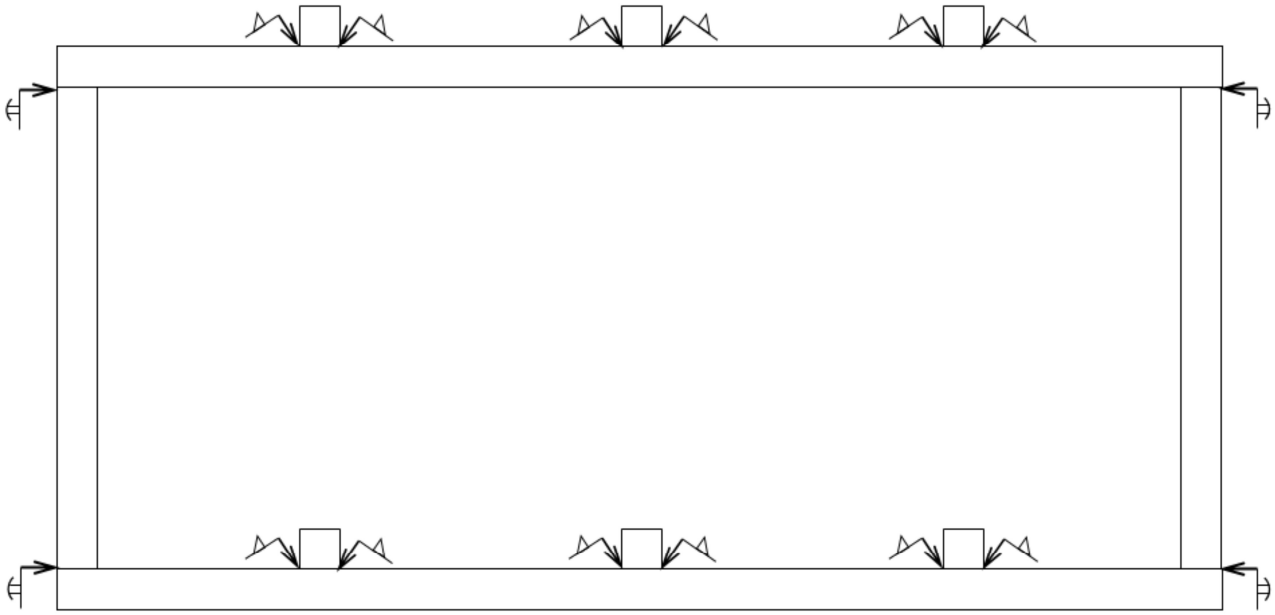

ENGINEERING DRAWING TITLE BLOCK							
DRAWING NAME	MEVER TOOLS STORAGE RACKS WELDING JOINTS				REVISIONS		
DRAWING No.	DC-DD-01-02 ANCHOR PLATES				No.	DATE	
DRAWING BY	FRED WEBBERKING				1		
DATE DRAWN	11/05/05				2		
SCALE	NTS	VIEW	PLAN	PROJECTION	FIRST ANGLE	3	
MATERIALS LIST						TOLERANCES	
4	8"X 8" X ½" MILD STEET PLATES					DECIMAL	
						FRACTIONAL	
						ANGLUAR	
NOTES	CROSS MEMBERS WELDING JOINT TOP & BOTTOM						

I drew this in first angle projection - auxiliary views for welding joints.

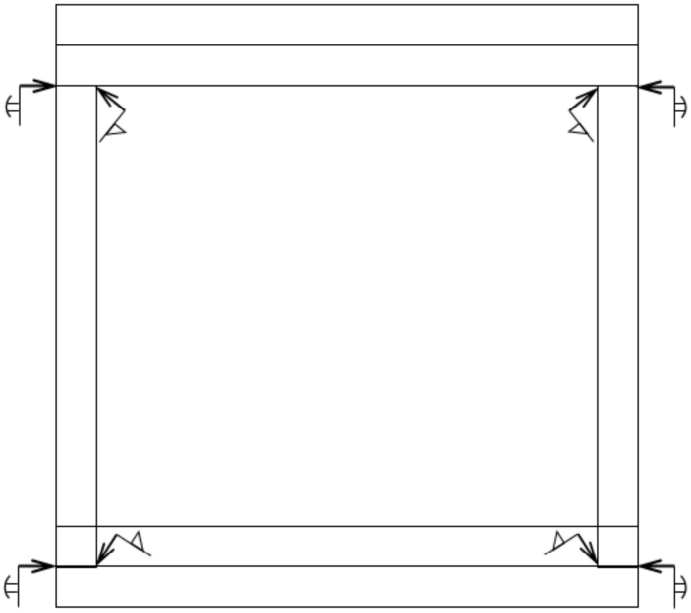

ENGINEERING DRAWING TITLE BLOCK							
DRAWING NAME	MEVER TOOLS STORAGE RACKS WELDING JOINTS			REVISIONS			
DRAWING No.	DC-DD-01-02 ANCHOR PLATES			No.	DATE		
DRAWING BY	FRED WEBBER KING			1			
DATE DRAWN	11/05/05			2			
SCALE	NTS	VIEW	END	PROJECTION	FIRST ANGLE	3	
MATERIALS LIST						TOLERANCES	
4	8"X 8" X ½" MILD STEET PLATES					DECIMAL	
						FRACTIONAL	
						ANGLUAR	
NOTES:							

I drew this in first angle projection - auxiliary views for welding joints.

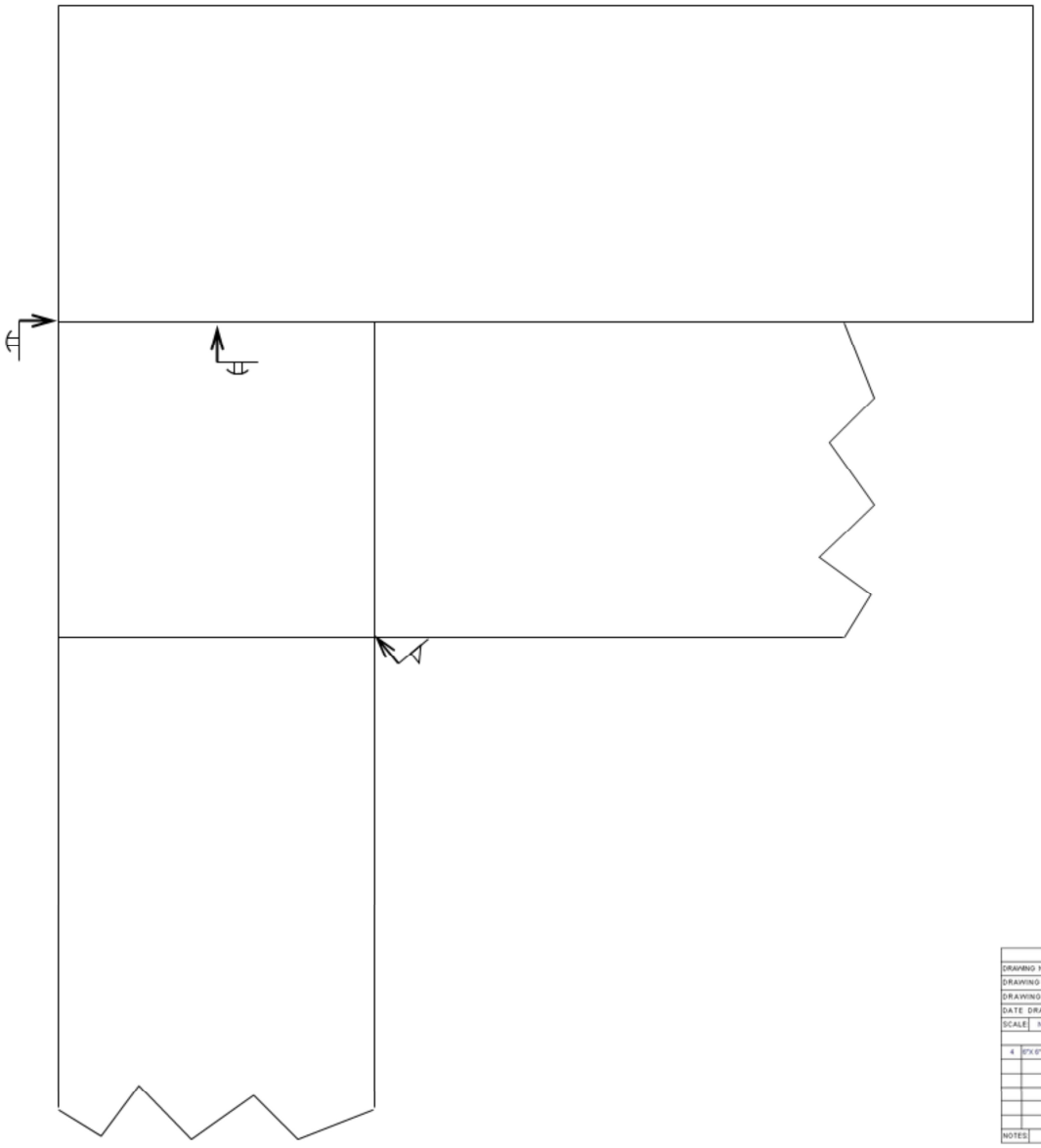

ENGINEERING DRAWING TITLE BLOCK							
DRAWING NAME	MEYER TOOLS STORAGE RACKS WELDING JOINTS				REVISIONS		
DRAWING No.	DC-DD-01-02 ANCHOR PLATES				No.	DATE	
DRAWING BY	FRED WEBBERKING				1		
DATE DRAWN	11/05/05				2		
SCALE	NTS	VIEW	AUX. END	PROJECTION FIRST ANGLE	3		
MATERIALS LIST					TOLERANCES		
4	6"X 6" X ½" MILD STEET PLATES				DECIMAL		
					FRACTIONAL		
					ANGLUAR		
NOTES:							

I drew this in first angle projection - auxiliary views for welding joints. Picture showing another rack in use.

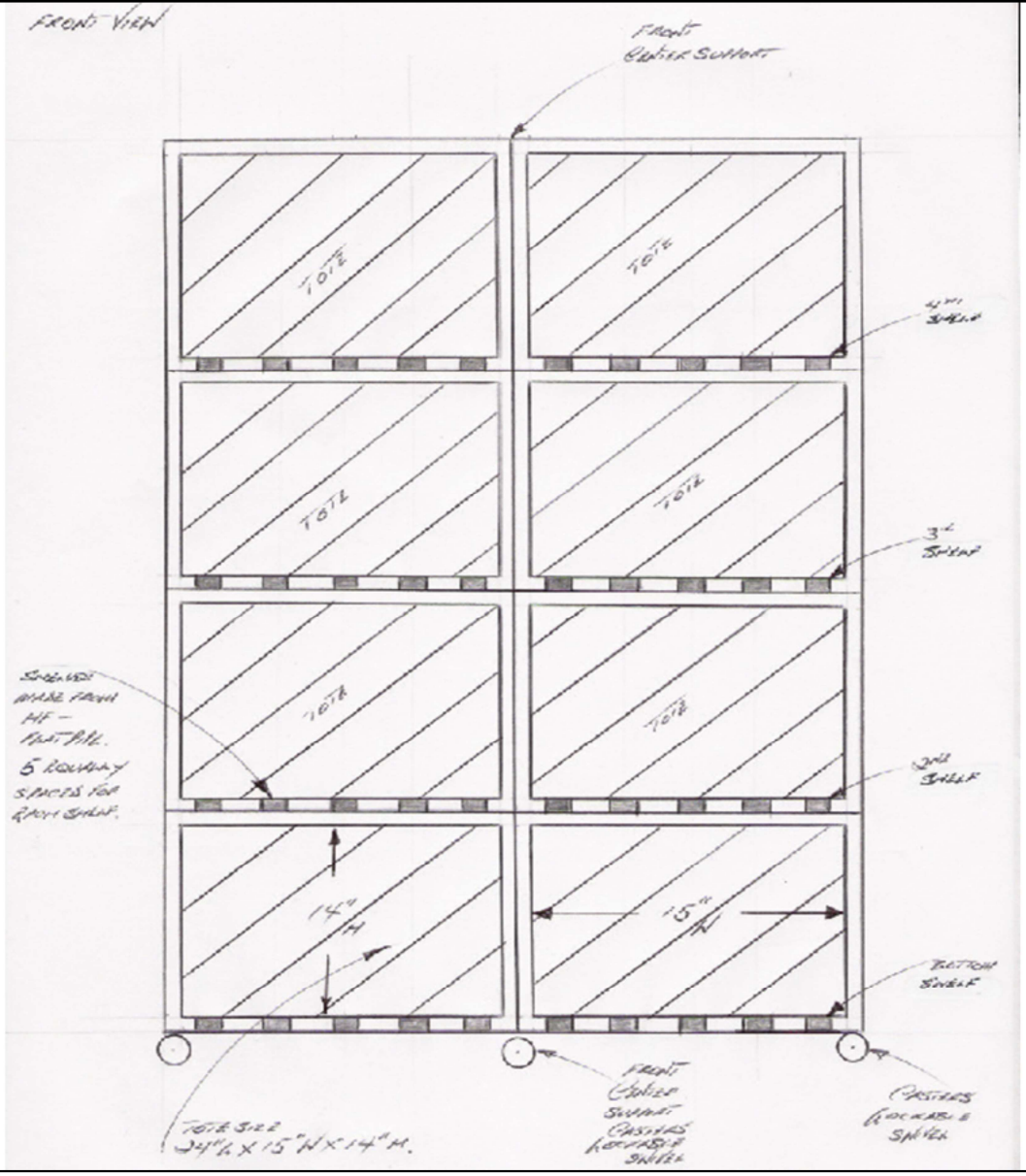

Drawing of tote storage rack - front view.

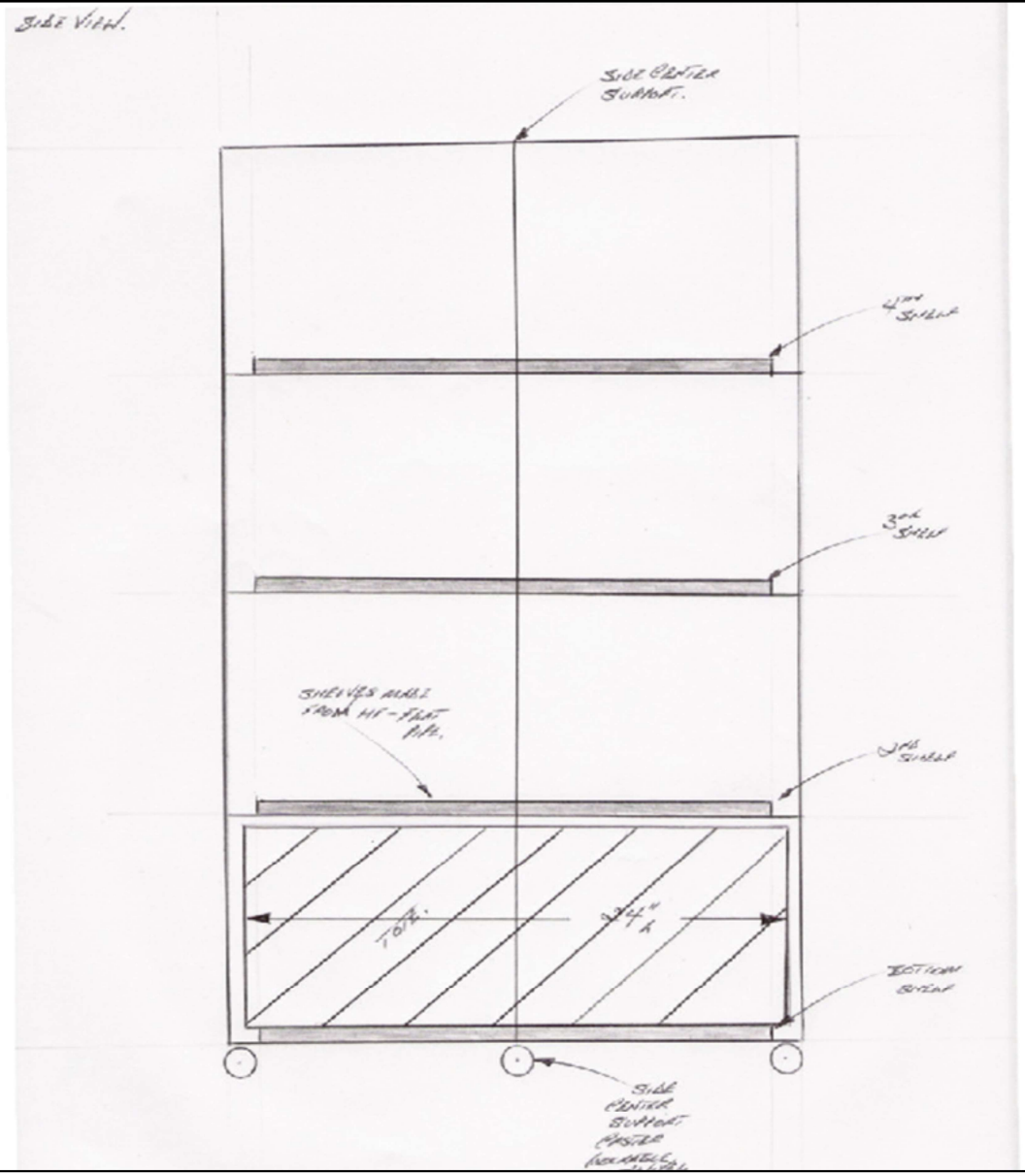

Drawing of tote storage rack - side view.

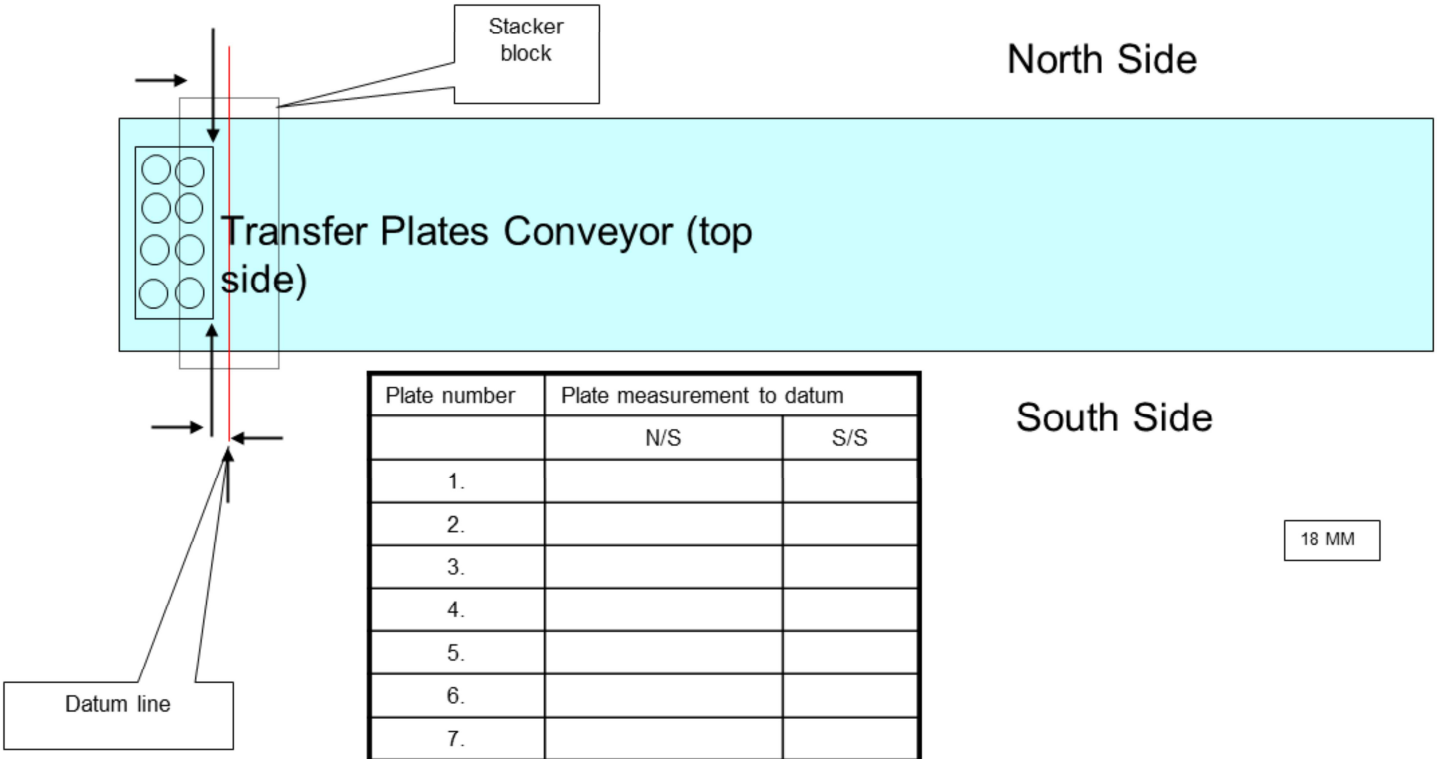

Plate number	Plate measurement to datum	
	N/S	S/S
1.		
2.		
3.		
4.		
5.		
6.		
7.		
8.		
9.		
10.		
11.		
12.		
13.		
14.		
15.		
16.		

The next series of diagrams I drew up to make an transfer alignment centering tool pin that would pass through to an lifting station. Problems and time delays were encountered as the alignment was done by eye with a combination of using a product sample to make this critical alignment. This tool would save a lot of time in the alignment element of the tool changeover.

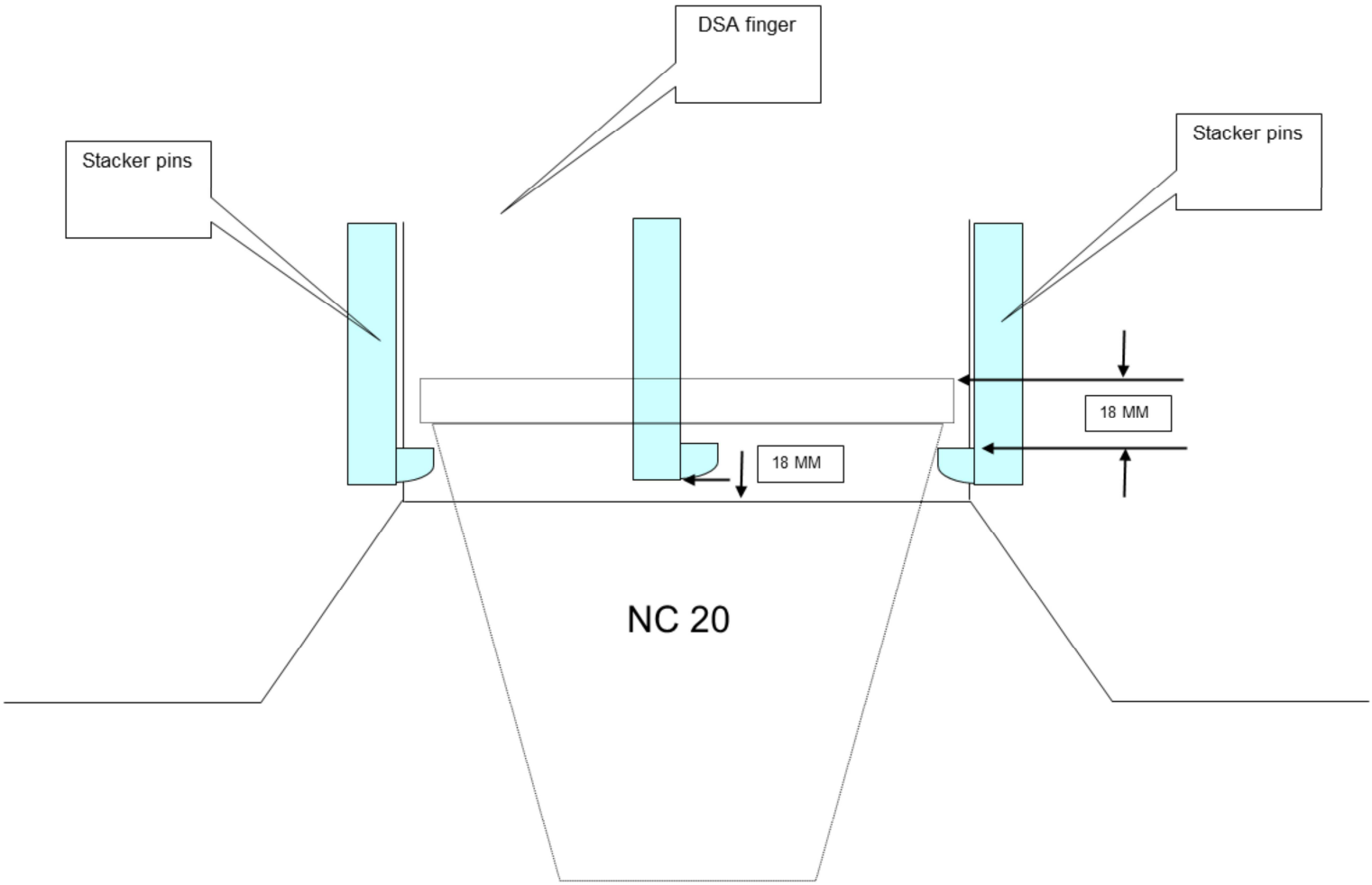

Product sample being used for alignment.

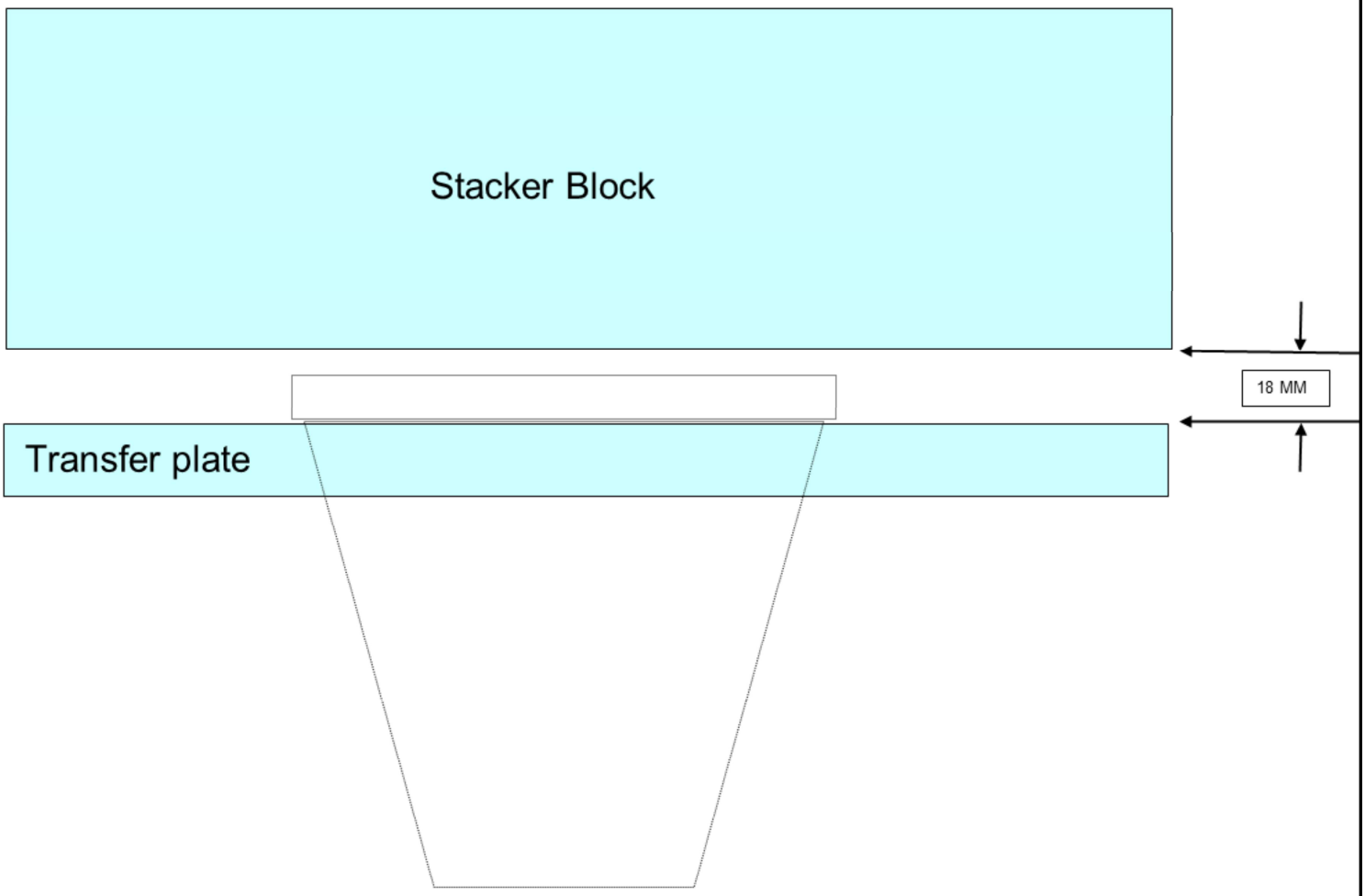

Alignment through transfer plate.

Picture showing the stacker block.

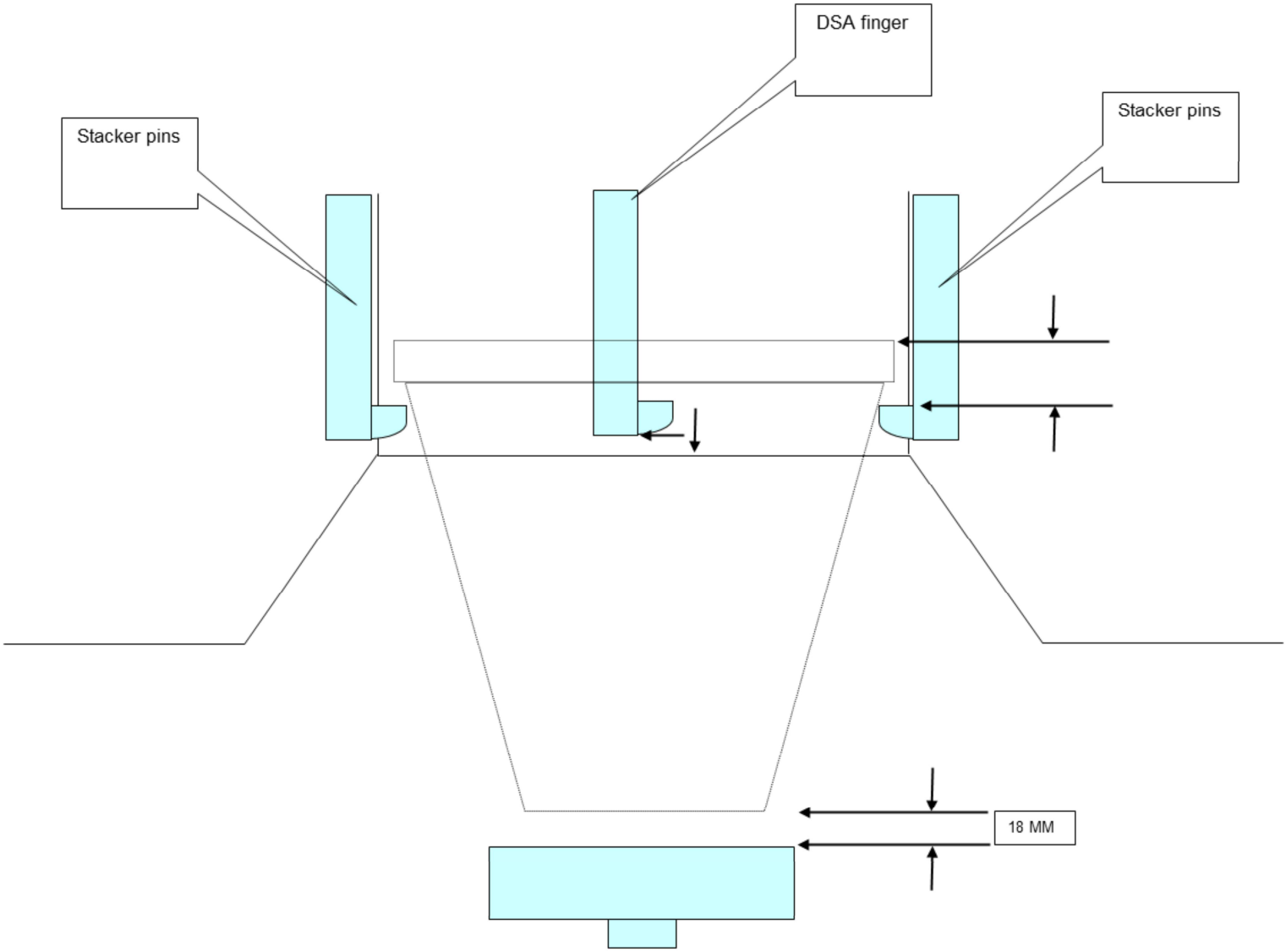

Diagram showing lifting station.

Picture showing the lifting station through the transfer plate.

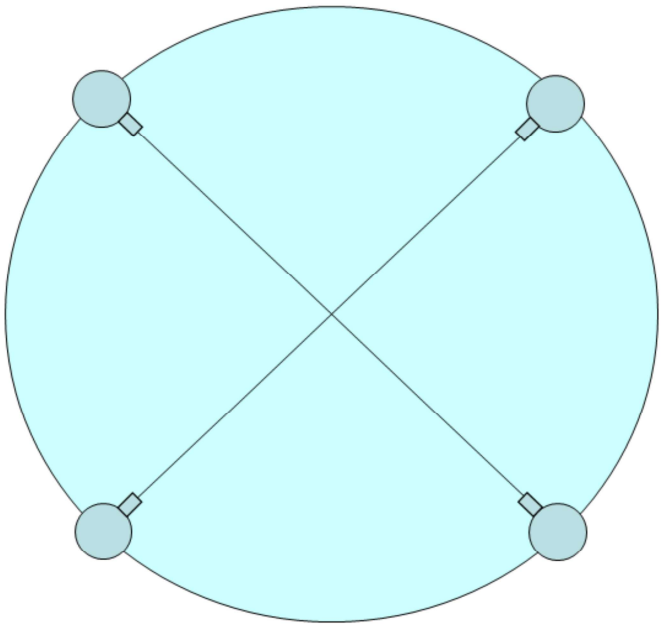

Diagram showing Z axis looking down through the top of the stacker block.

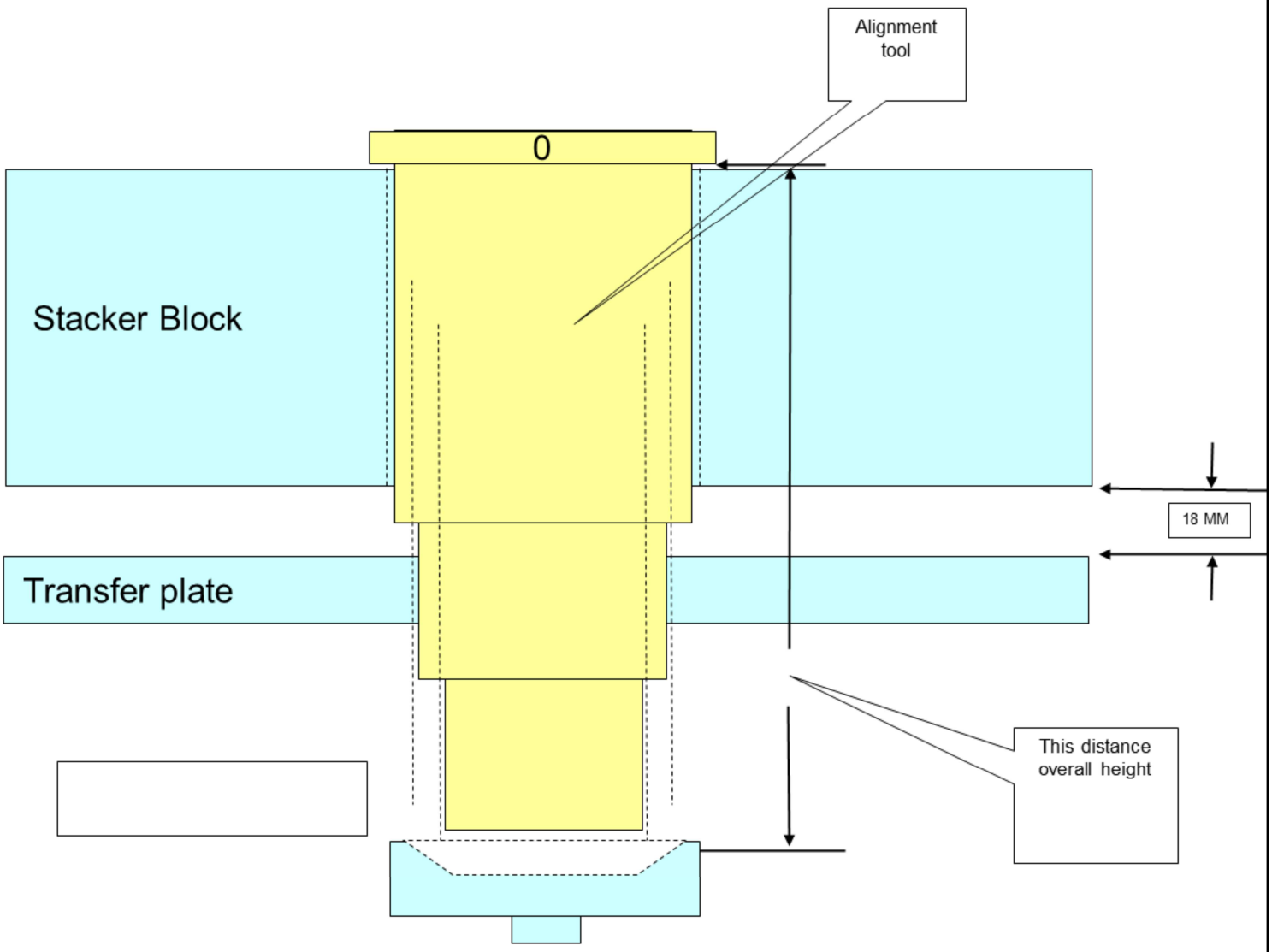

Diagram showing the alignment tool installed to make the necessary alignment of the components.

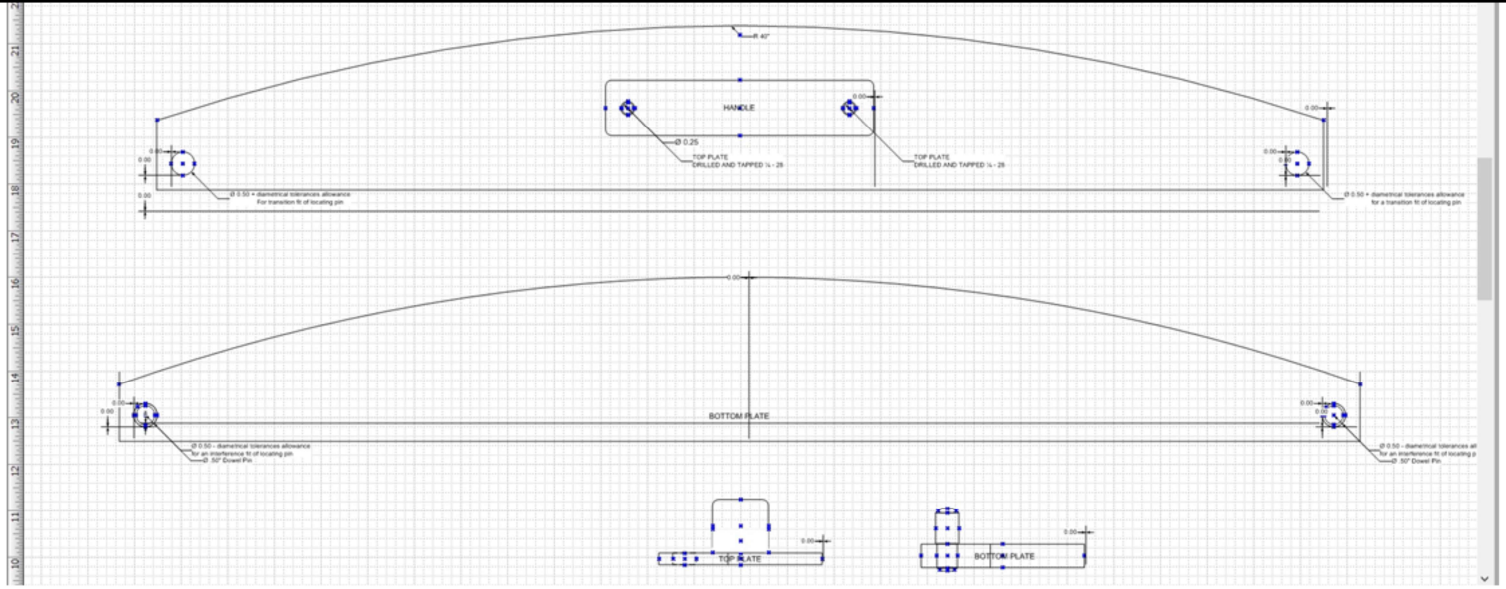

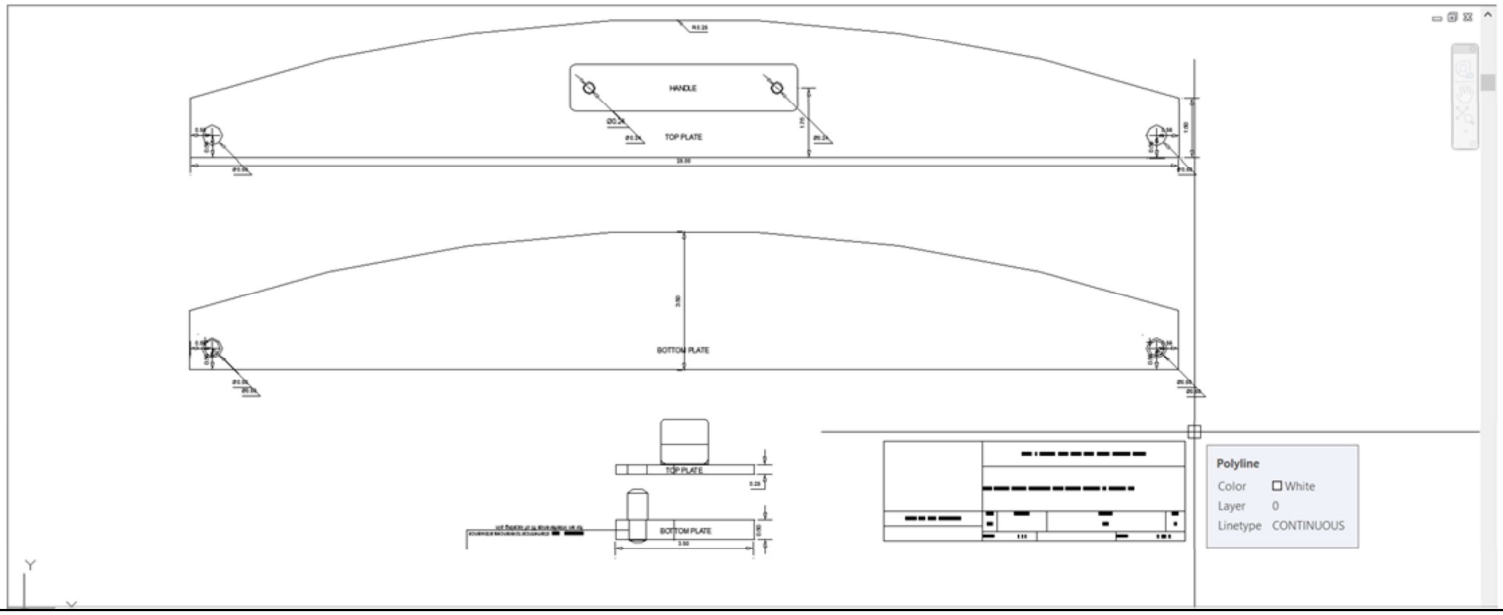

This is a drawing of a cutting guide I first created in MS Visio. Later I had to re-draw it in AutoCAD for the machine shop to scan it into their CNC water jet cutter.

This is a drawing of a cutting guide I first created in MS Visio. Later I had to re-draw it in AutoCAD for the machine shop to scan it into their CNC water jet cutter.

Cont.

Actual piece installed on a mobile platform.

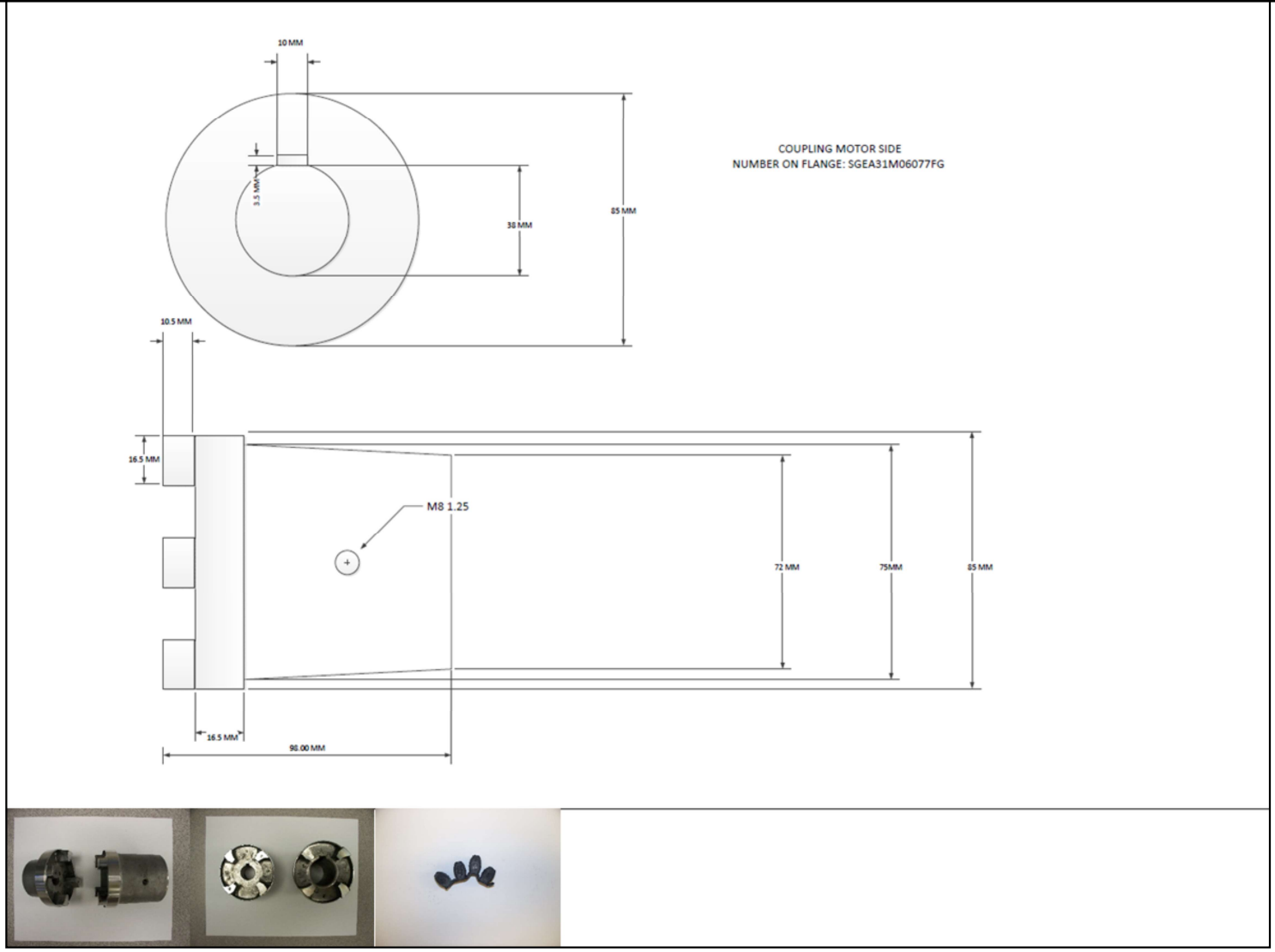

This is a drawing that I made of a drive coupling. I was investigating the failure of a hydraulic pump drive motor coupling and had to make a drawing of the coupling to replace it with one made from stainless steel.

Page 1 of 2.

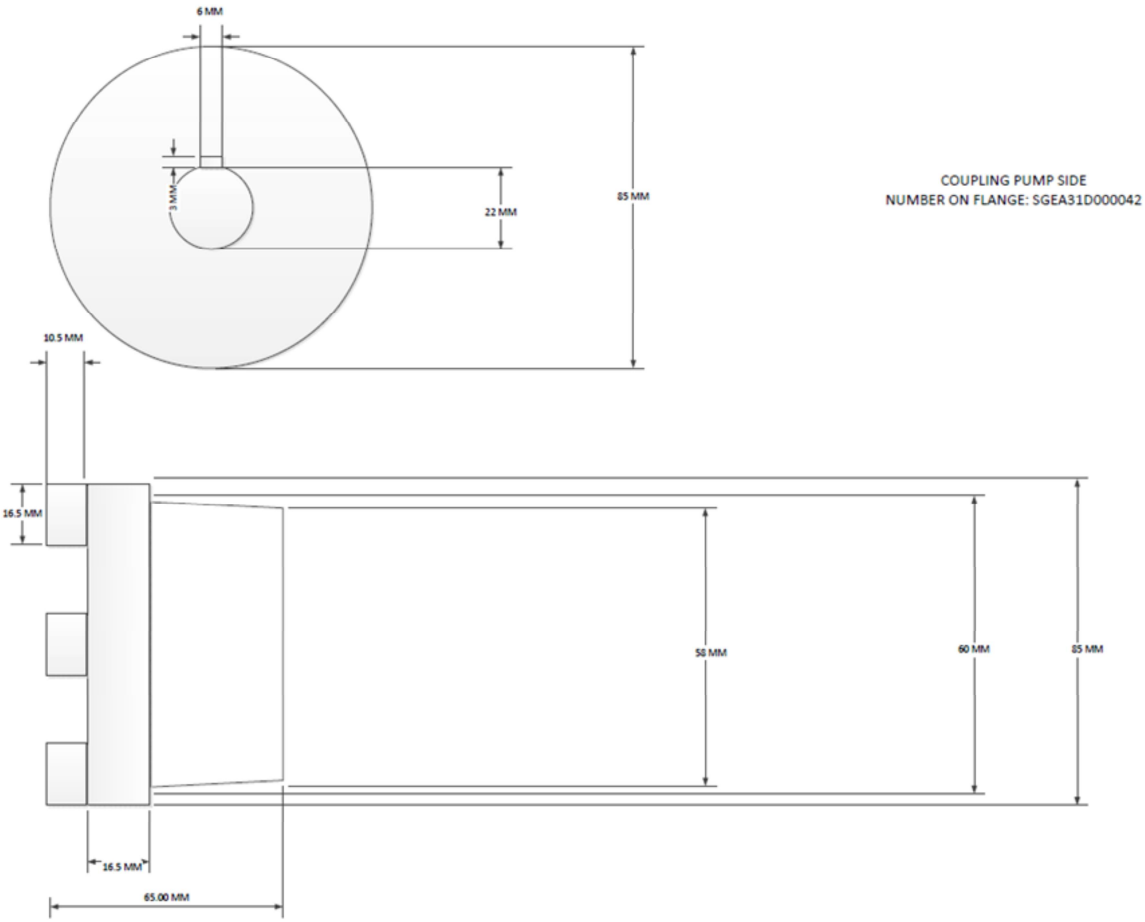

This is a drawing that I made of a drive coupling. I was investigating the failure of a hydraulic pump drive motor coupling and had to make a drawing of the coupling to replace it with one made from stainless steel.

Page 2 of 2.

DRAWING NOT TO SCALE

VACUUM/BLOWER RELIEF VALVE FILTER

THIS IS NEEDED TO FIT ALL 7 VACUUM/BLOWERS A1, A2, B, E1, E2, C, & D

AT EACH DOWN DAY WE WILL NEED X 7 OF THESE FILTERS ON HAND STAGED AT POINT OF USE STORAGE

OUR P/N: 34883

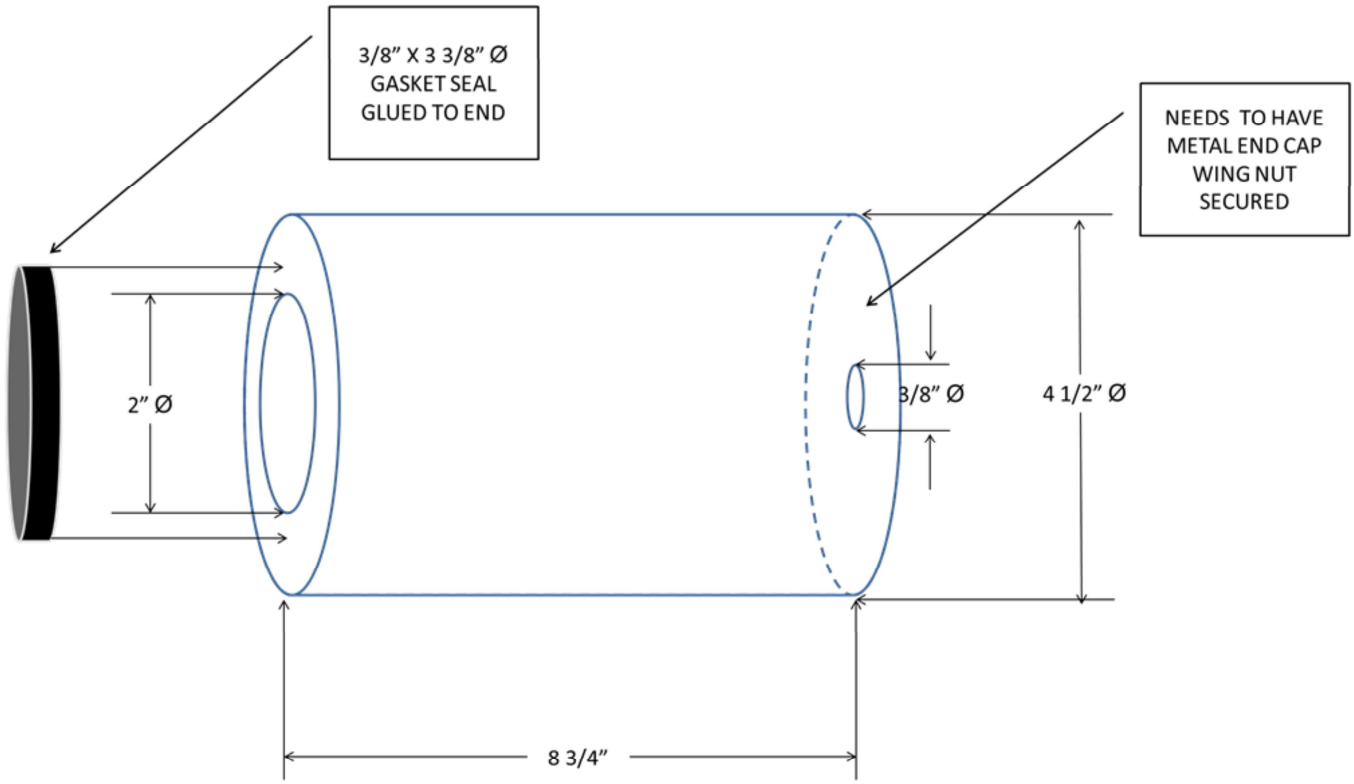

2

Is anyone going to know or remember me for these contributions that I have made to society? Vacuum blower filters. We had a mismatch of vacuum blowers with every combination of filters with no information on them so I had to measure them all, draw them and resource them.

Page 1 of 5.

DRAWING NOT TO SCALE

VACUUM/BLOWER DUST COLLECTOR

THIS IS NEEDED TO FIT A1, B & E1 DOSING UNITS DUST COLLECTORS FORM A STACK OF TWO FILTERS BANDED TOGETHER

AT EACH DOWN DAY WE WILL NEED X 3 OF THESE FILTERS ON HAND STAGED AT POINT OF USE STORAGE

OUR P/N: 34763

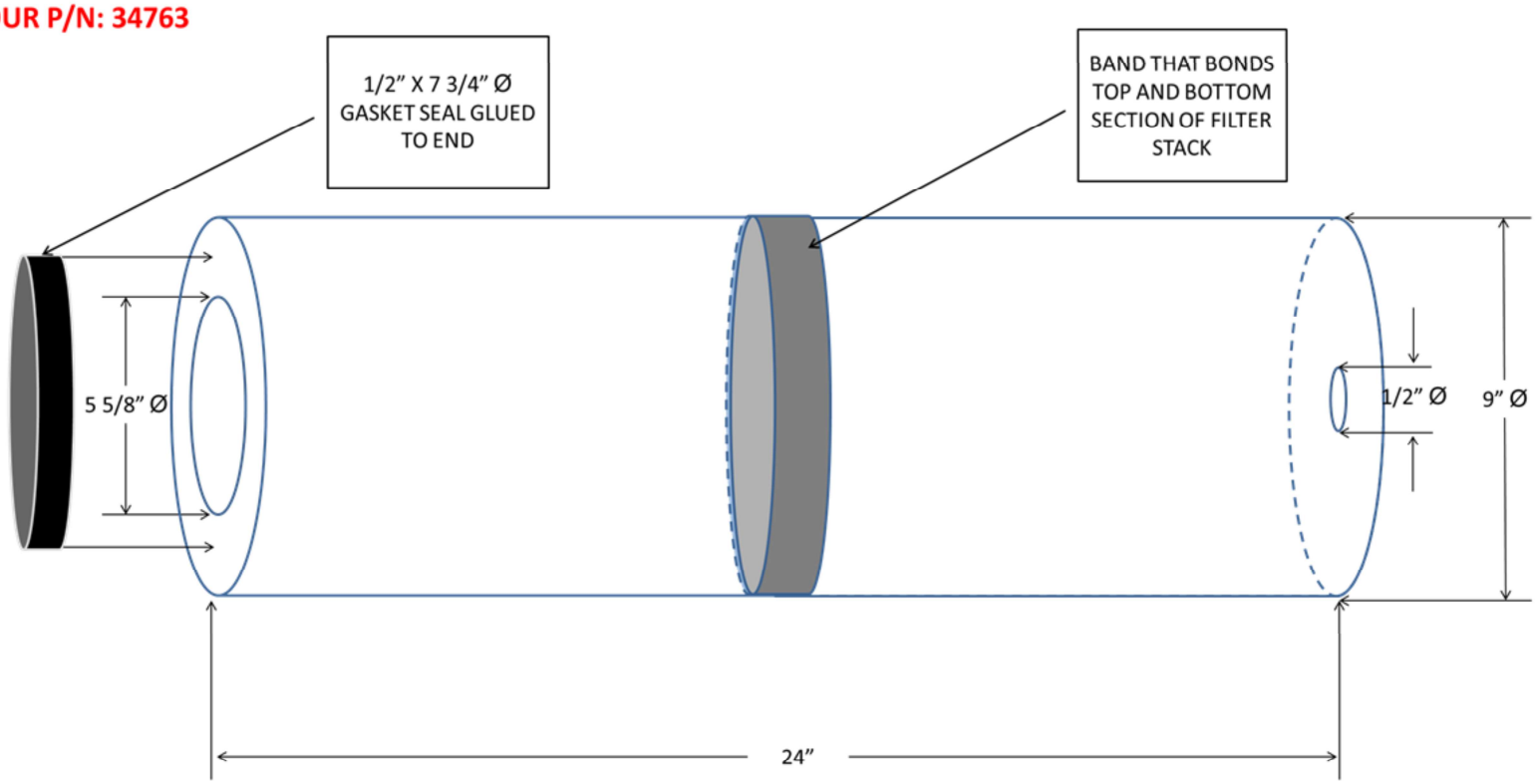

3

This is a drawing that I made of a drive coupling. I was investigating the failure of a hydraulic pump drive motor coupling and had to make a drawing of the coupling to replace it with one made from stainless steel.

Page 2 of 5.

DRAWING NOT TO SCALE

VACUUM/BLOWER INTAKE FILTER

THIS IS NEEDED TO FIT A2, E2 C & D DOSING UNITS VACUUM BLOWERS

AT EACH DOWN DAY WE WILL NEED X 4 OF THESE FILTERS ON HAND STAGED AT POINT OF USE STORAGE

OUR P/N: 34686

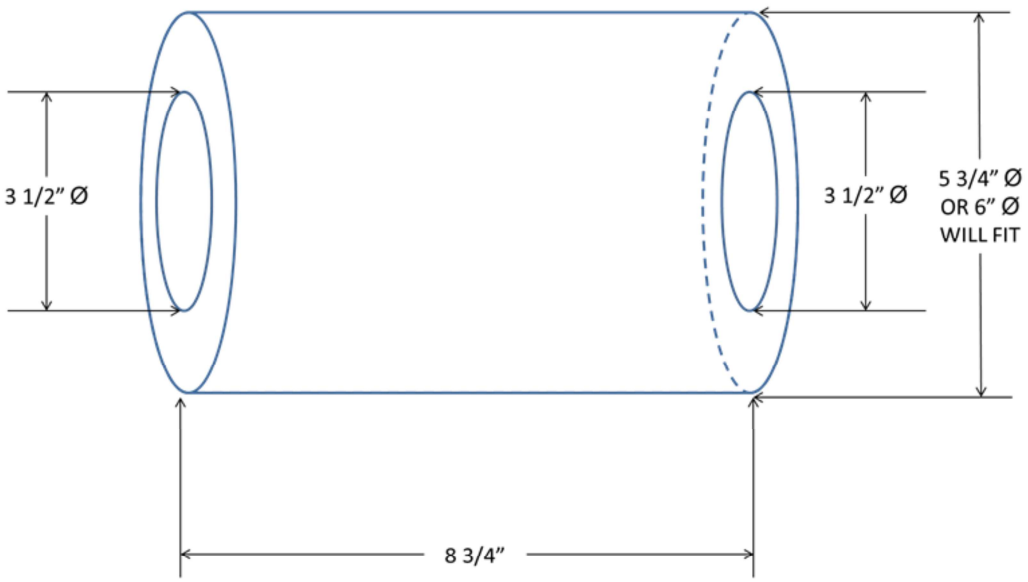

4

This is a drawing that I made of a drive coupling. I was investigating the failure of a hydraulic pump drive motor coupling and had to make a drawing of the coupling to replace it with one made from stainless steel.

Page 3 of 5.

DRAWING NOT TO SCALE

VACUUM/BLOWER DUST COLLECTOR

THIS IS NEEDED TO FIT A2, E2, C & D DOSING UNITS DUST COLLECTORS

AT EACH DOWN DAY WE WILL NEED X 4 OF THESE FILTERS ON HAND STAGED AT POINT OF USE STORAGE

OUR P/N: 34762

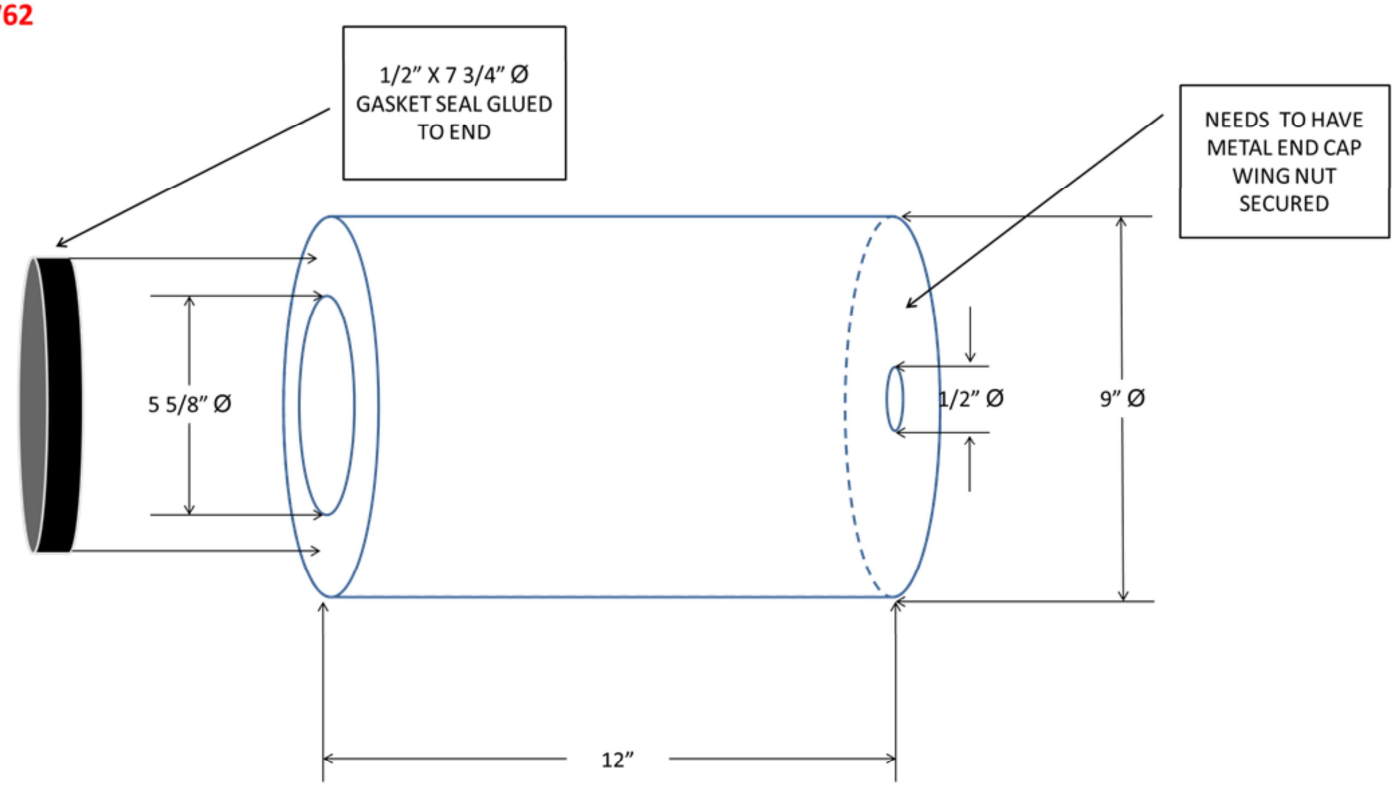

5

This is a drawing that I made of a drive coupling. I was investigating the failure of a hydraulic pump drive motor coupling and had to make a drawing of the coupling to replace it with one made from stainless steel.

Page 4 of 5.

DRAWING NOT TO SCALE

MAIN COMPONENT HOPPERS ON C & D BEAMS

THIS FILTER IS INSTALLED ON THE LID TO THE MAIN COMPONENT HOPPERS ON C & D BEAM ONLY AT THE VACUUM INLET

AT EACH DOWN DAY WE WILL NEED X 2 OF THESE FILTERS ON HAND STAGED AT POINT OF USE STORAGE

OUR P/N: 34985

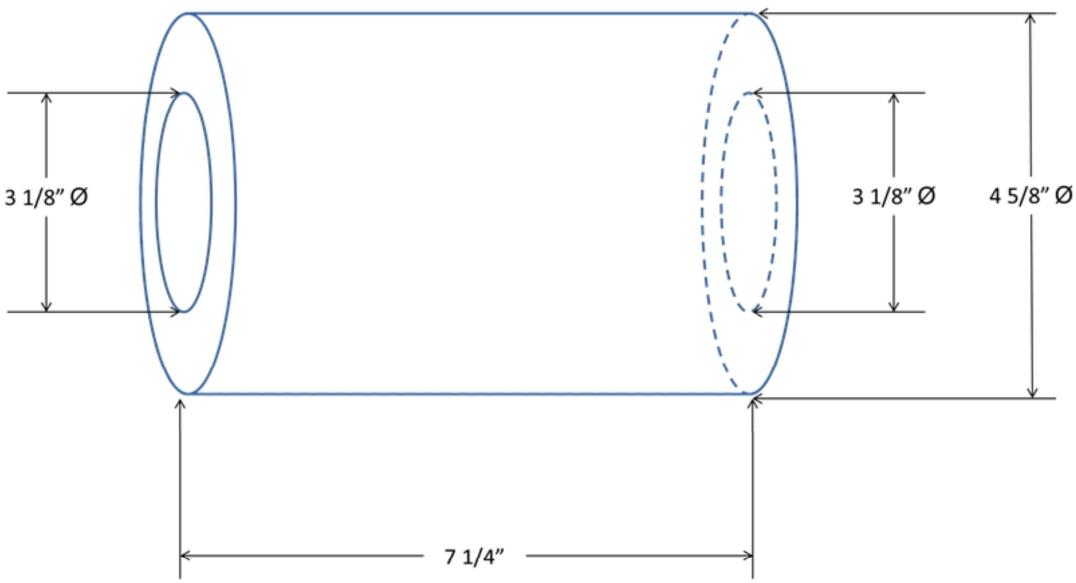

6

This is a drawing that I made of a drive coupling. I was investigating the failure of a hydraulic pump drive motor coupling and had to make a drawing of the coupling to replace it with one made from stainless steel.

Page 5 of 5.

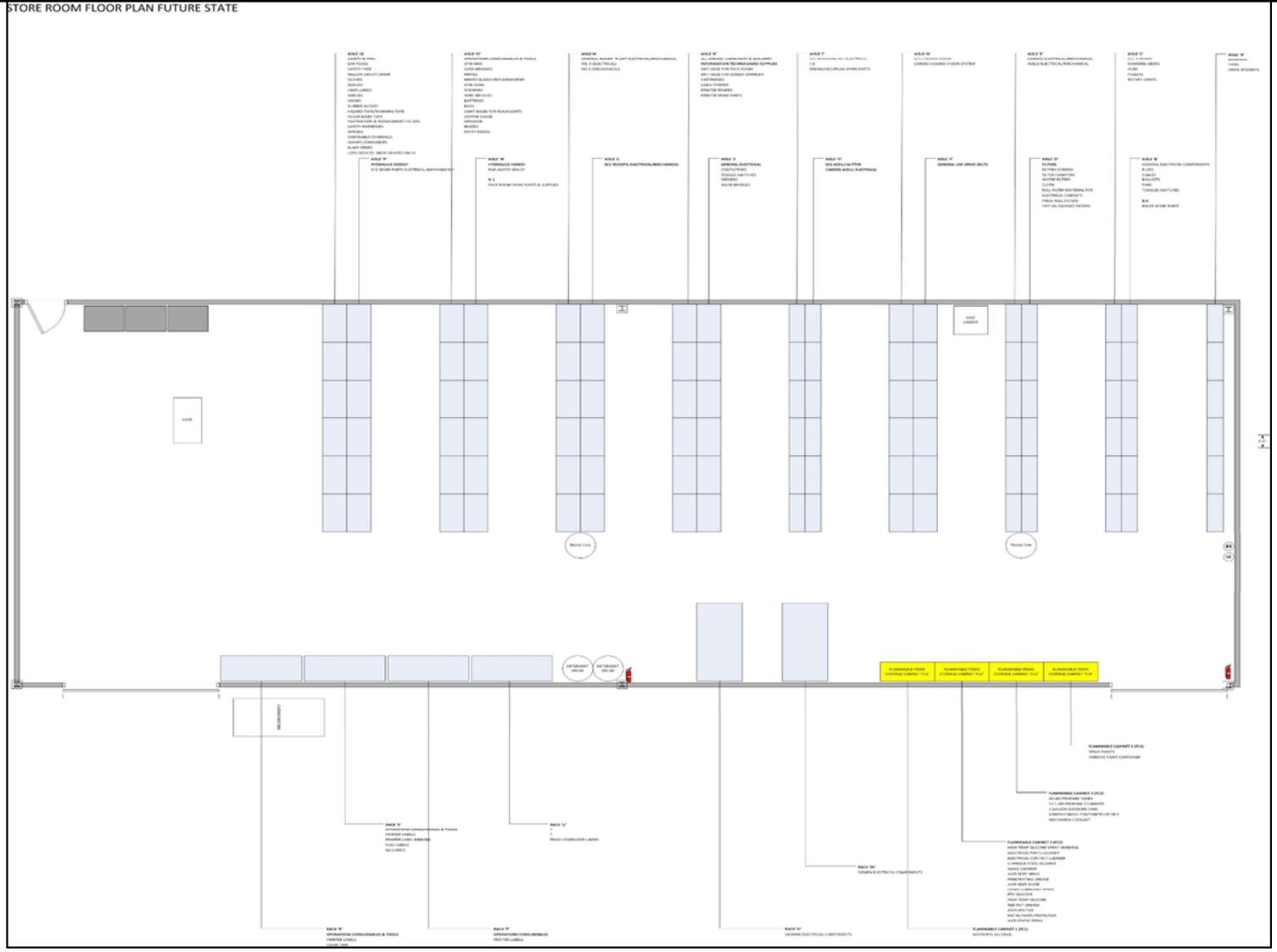

“I wanted a mission and for my sins I got one and after this one I didn’t want another one again” – Apocalypse Now quote.

I was given the order to revamp the parts store room. MRO (Maintenance Repairs Operations). It was a horrible site of nooks and crannies tables upon tables, benches, filing cabinets, desks and cubbyholes upon more benches, filing cabinets, desks and cubbyholes; a rabbit’s warren of aisles; no logic, no system, no method, no reason no, no process as to how things got done or how they didn’t get done…

This is my future state drawing map. The store man that over this place was out of control and violently lost his temper with me several times trying to help him. 50 thousand line items. I got the place organized, parts logically located and I installed a bar codes system. It came at a cost to me, I was completely physically and mentally worn out by the end of it… ☹

How to reorganize a part store room? As always you do a current state with an ABC 80/20 cost analysis breakdown and then work on a future strategy on how you want to organize all the parts in the most efficient manner according to how you wanted to do it – mechanical, electrical, purchased parts, big, small, electronic, high movers, low movers, common parts, specific parts, manufactured parts, organized by department or machine dedicated specific and what the operations would use too.

The real challenge was what kind of stock keeping method you were going to use – of which there are many; perpetual, two bin for operations satellite stuff, Kanban etc. You definitely needed a CMMS to keep track of things. Risk management? Min, max, reorder, lead times all had to be carefully considered…