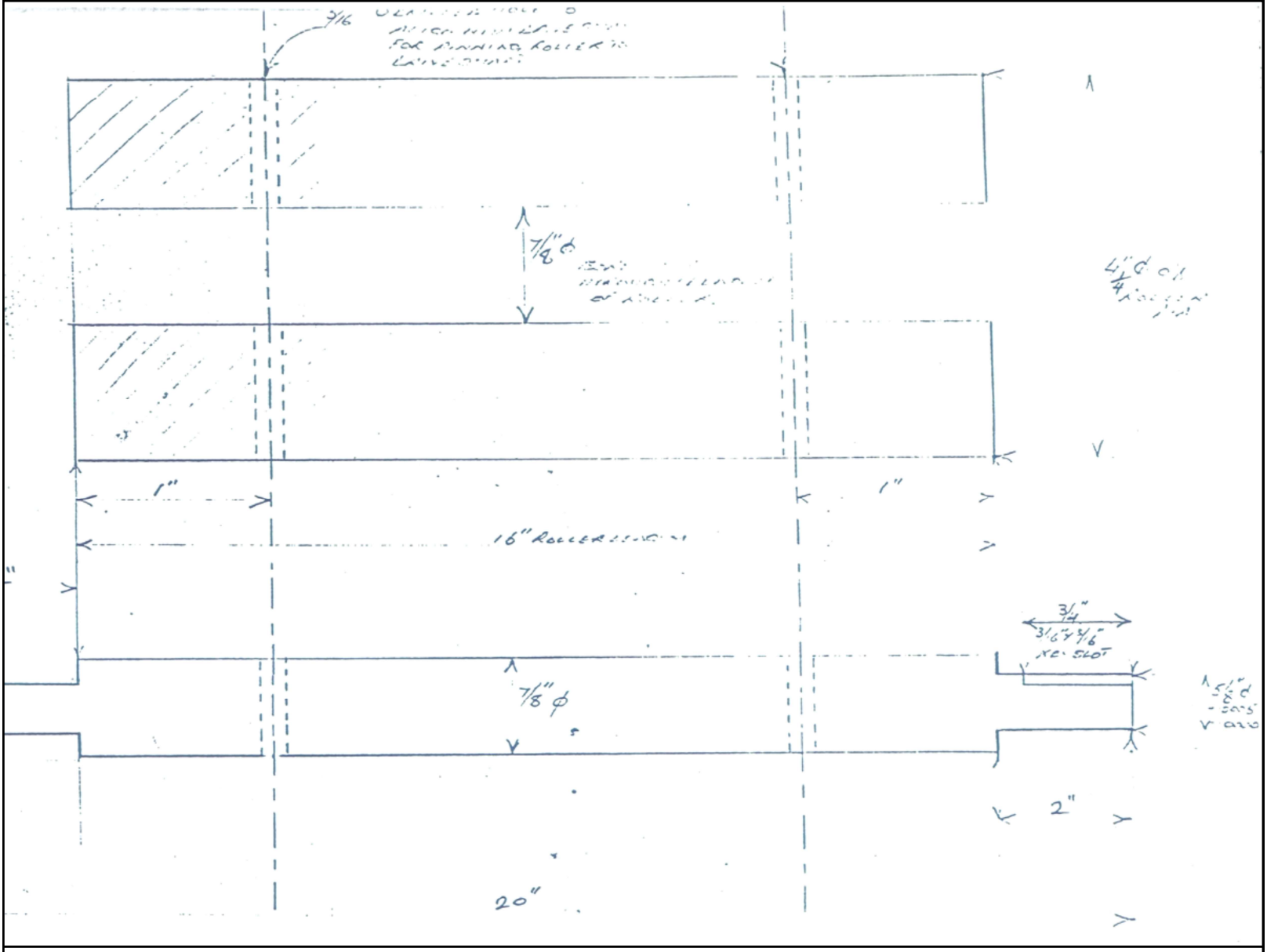

Drawing of a conveyor belt idler roller that I drew up to replace the original idler roller which was made from 7/8” Inch pipe with stub shafts welded onto the ends. The end caps with their stub shafts repeatedly fractured under the tension of the conveyor belt, so I had this made up from solid stainless steel round stock with a 1.5° degrees crown to help maintain tracking.

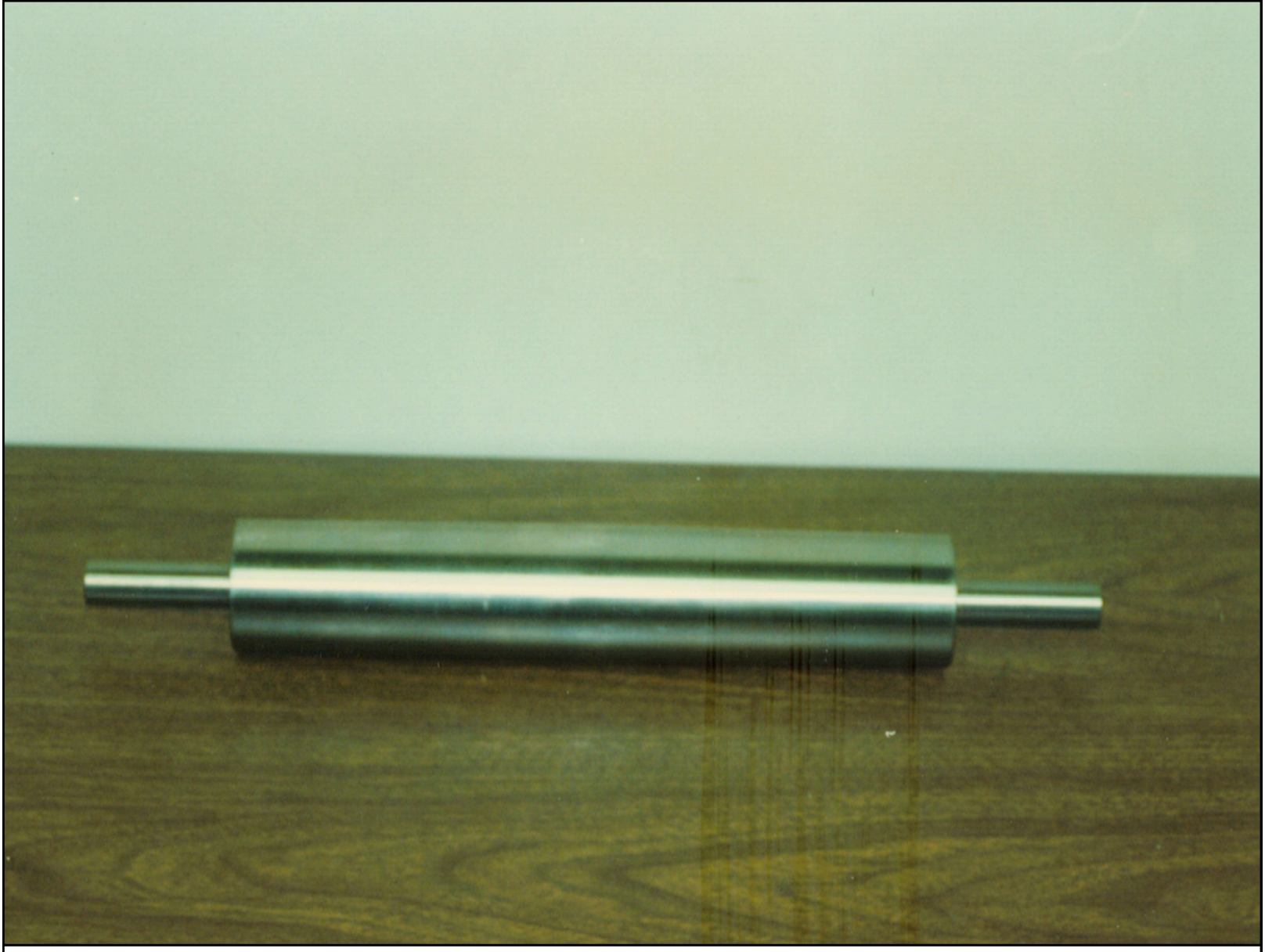

Pictures showing replacement conveyor idler roller.

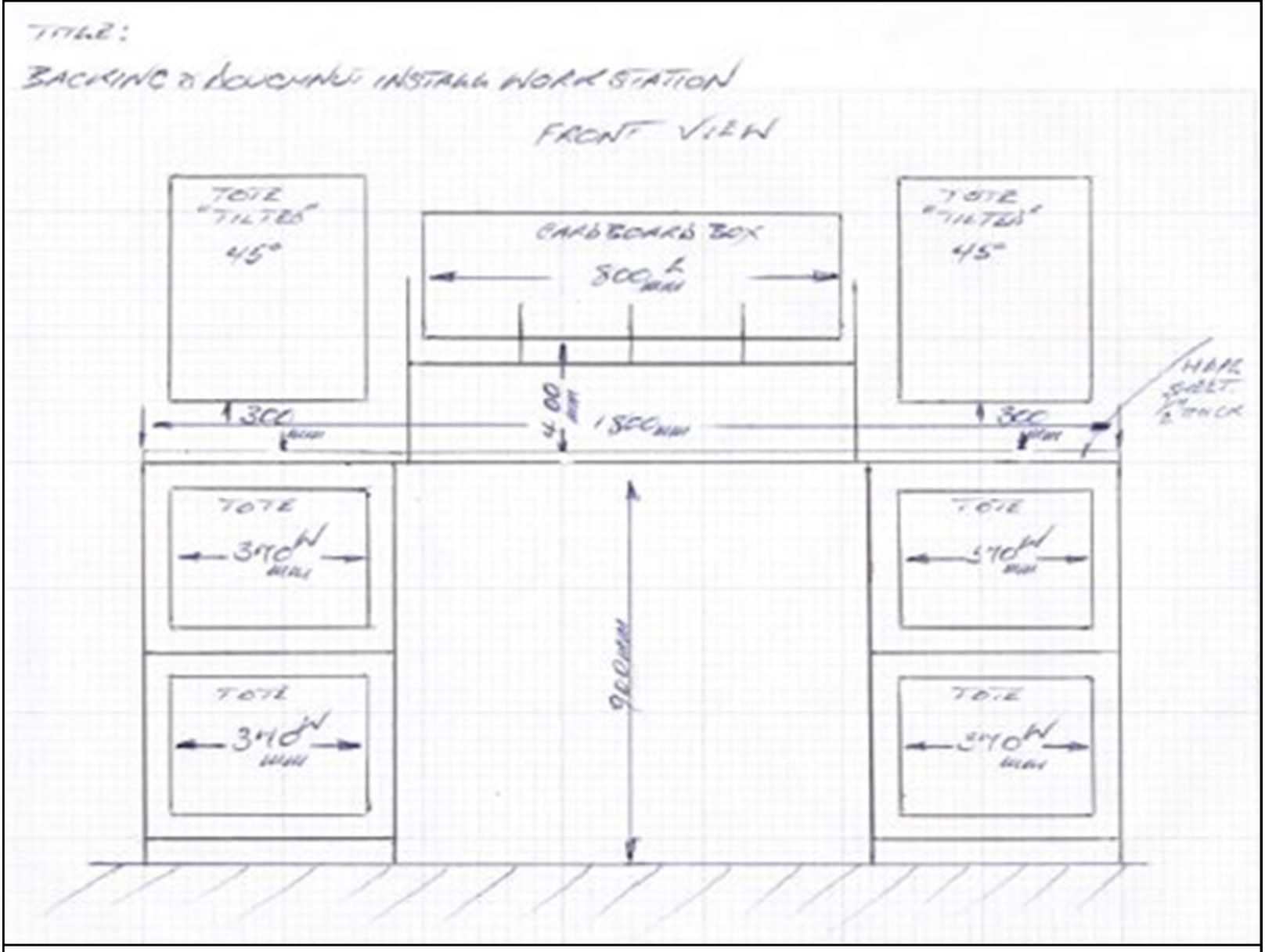

Drawing I made for component assembly work station - front view.

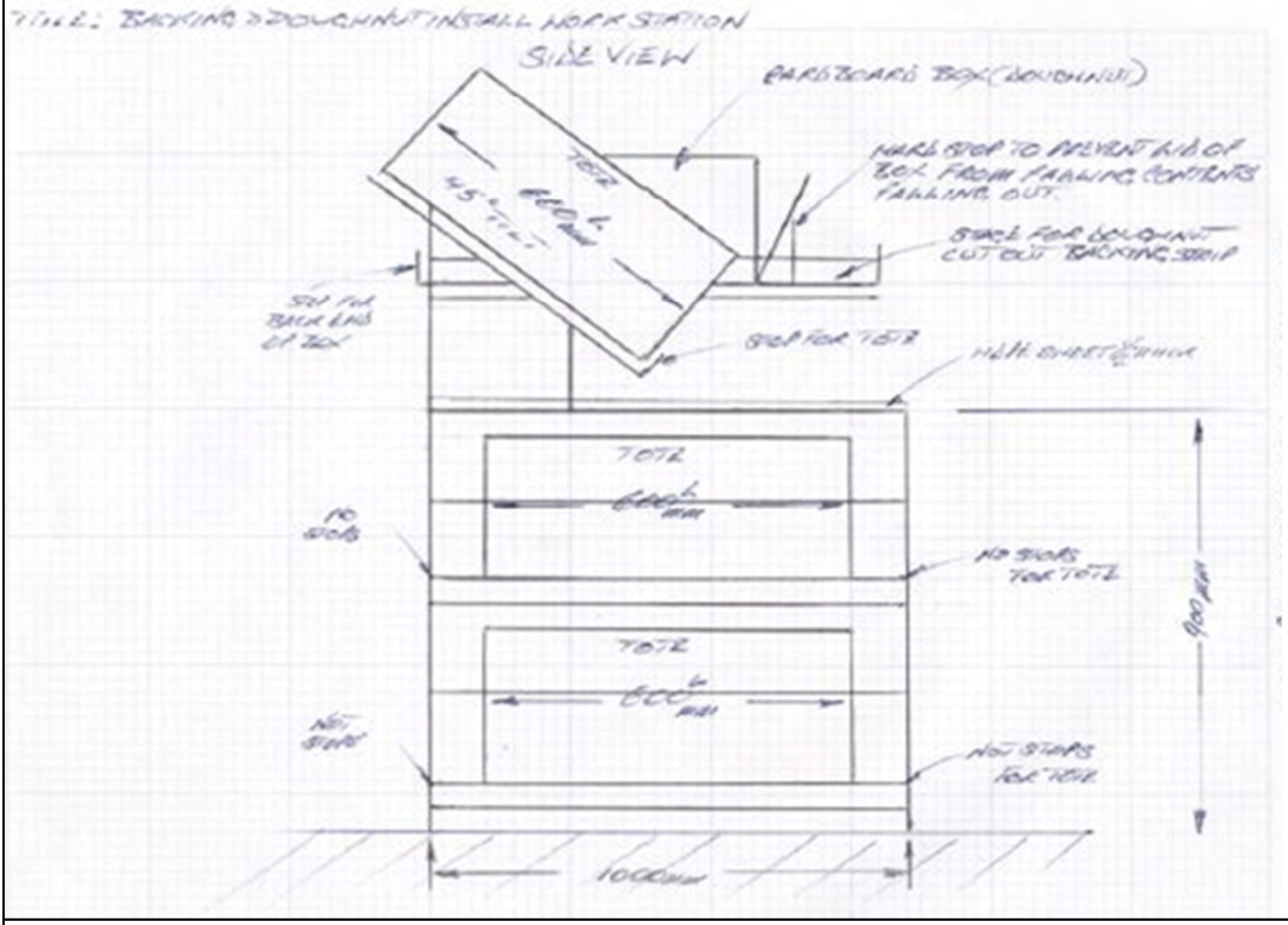

Drawing I made for component assembly work station - side view.

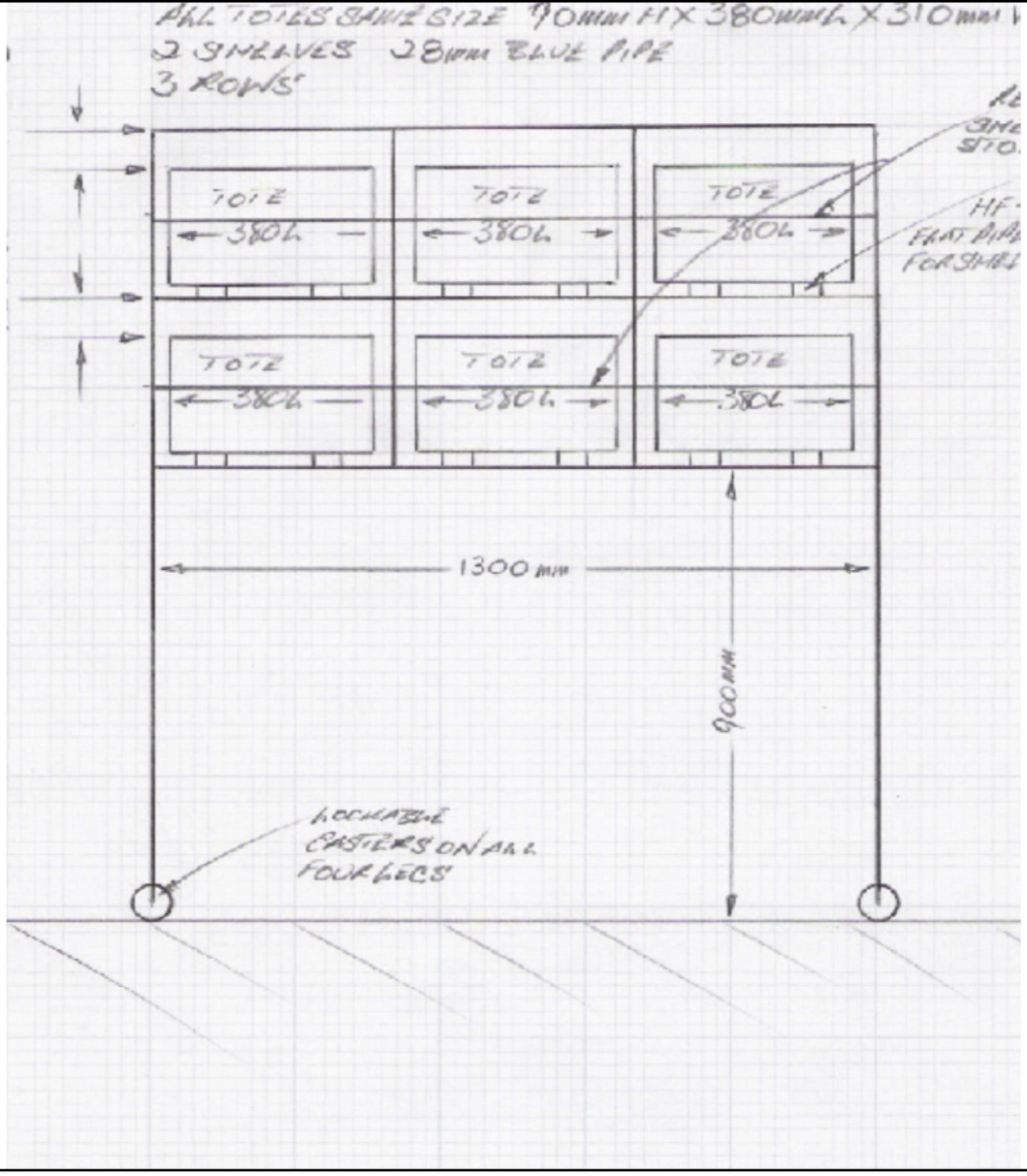

Drawing I made of a car map pocket work station tote storage rack - rear view. What I would do in most cases like this involving these more complicated tubular frame rack constructions would be to made a rough draft of what I needed and then submit that to the vendor. They would produce an AutoCAD drawing for my final approval before issuing a PO as seen in the last of this series.

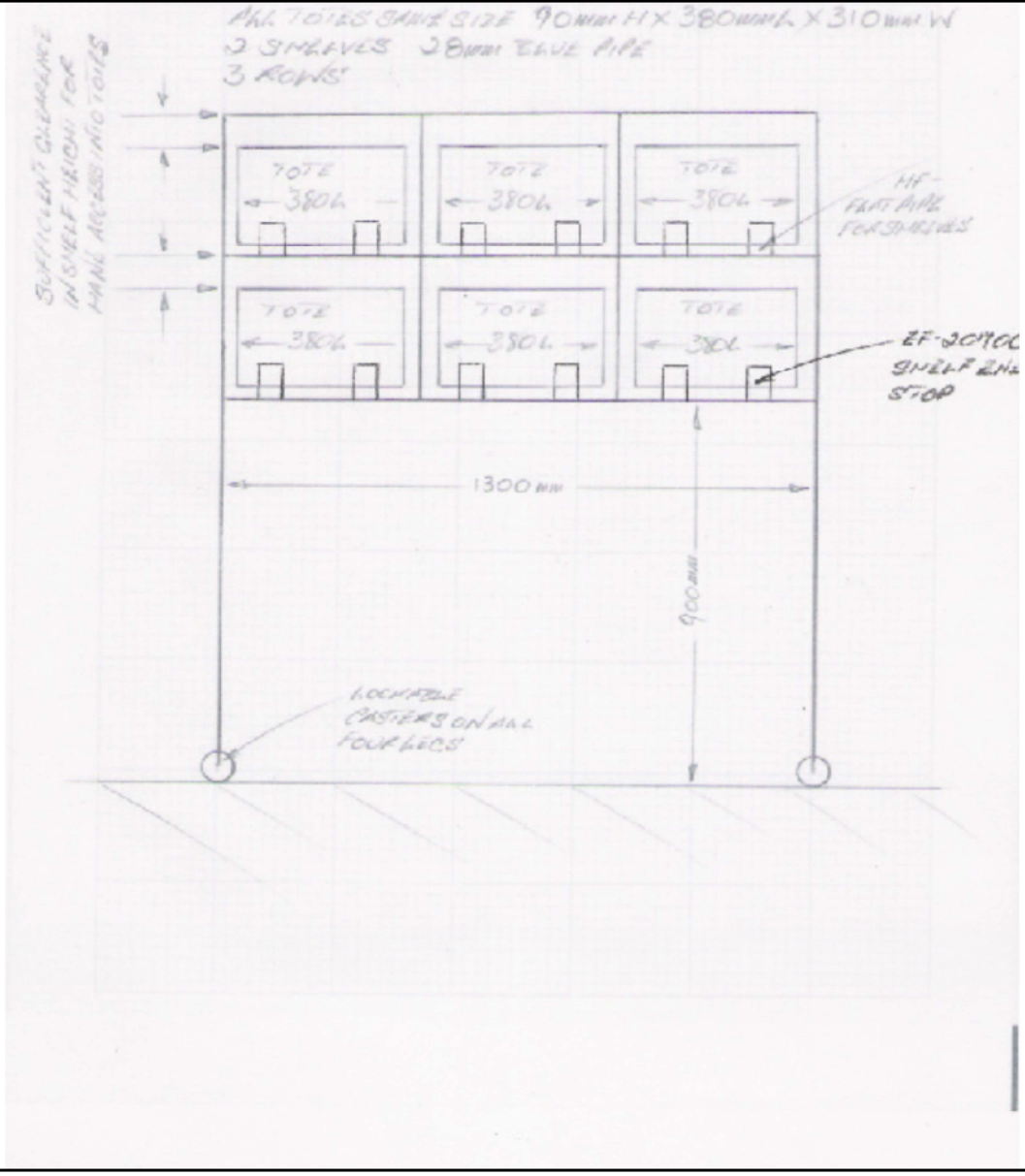

Drawing I made of a car map pocket work station tote storage rack - front view.

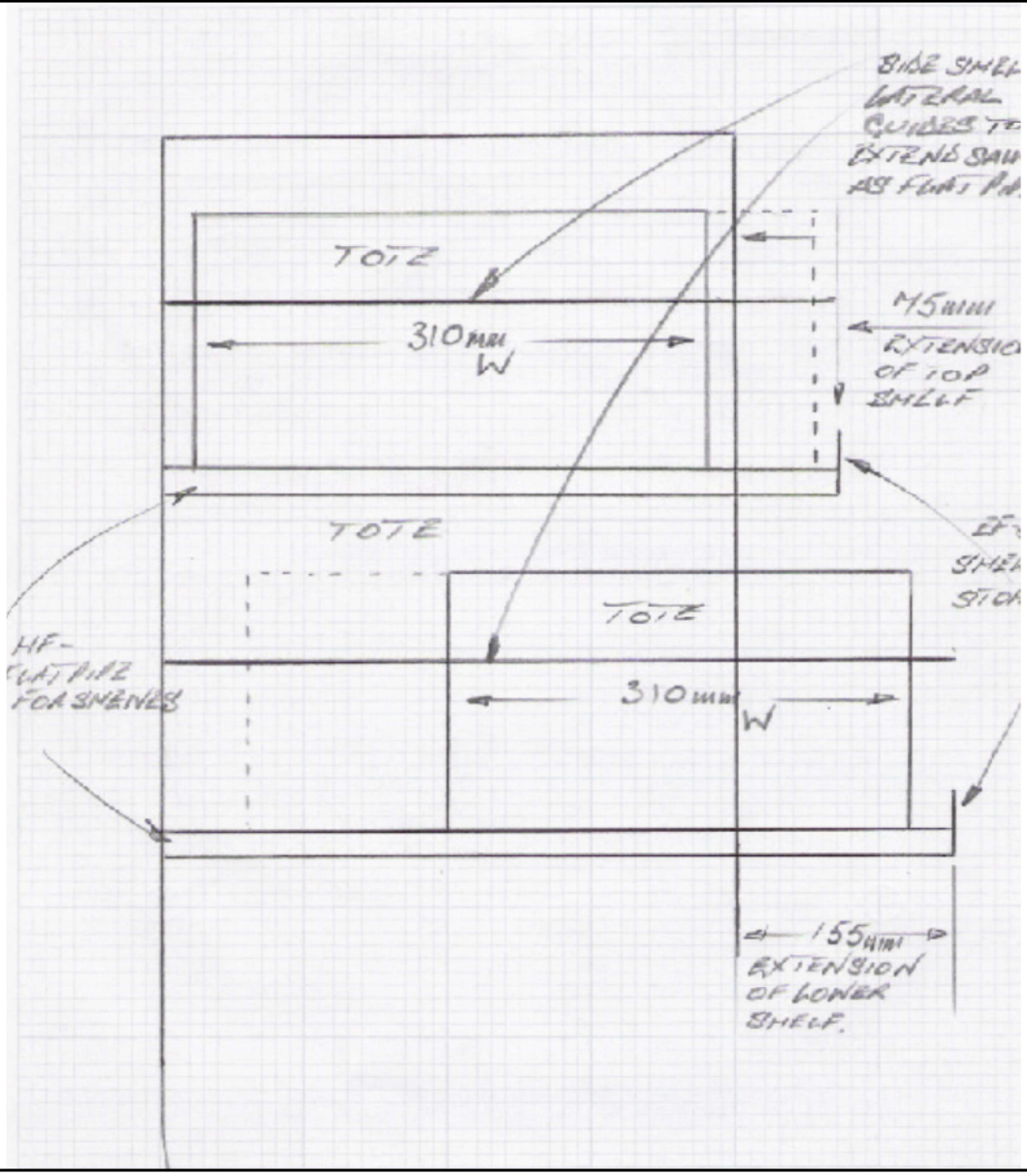

Drawing I made of a car map pocket work station tote storage rack - side view.

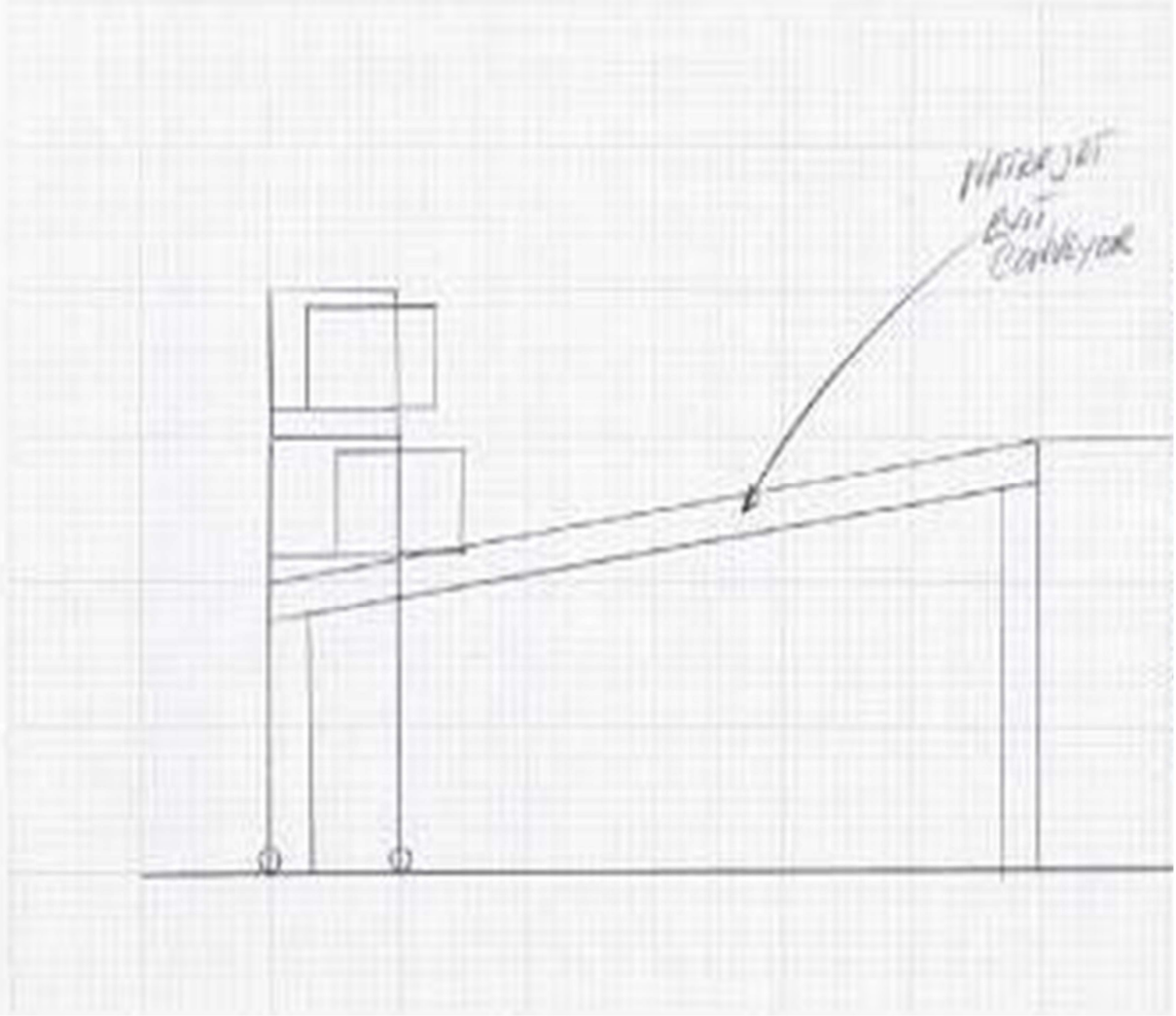

Drawing I made of a car map pocket work station tote storage rack - insitu view.

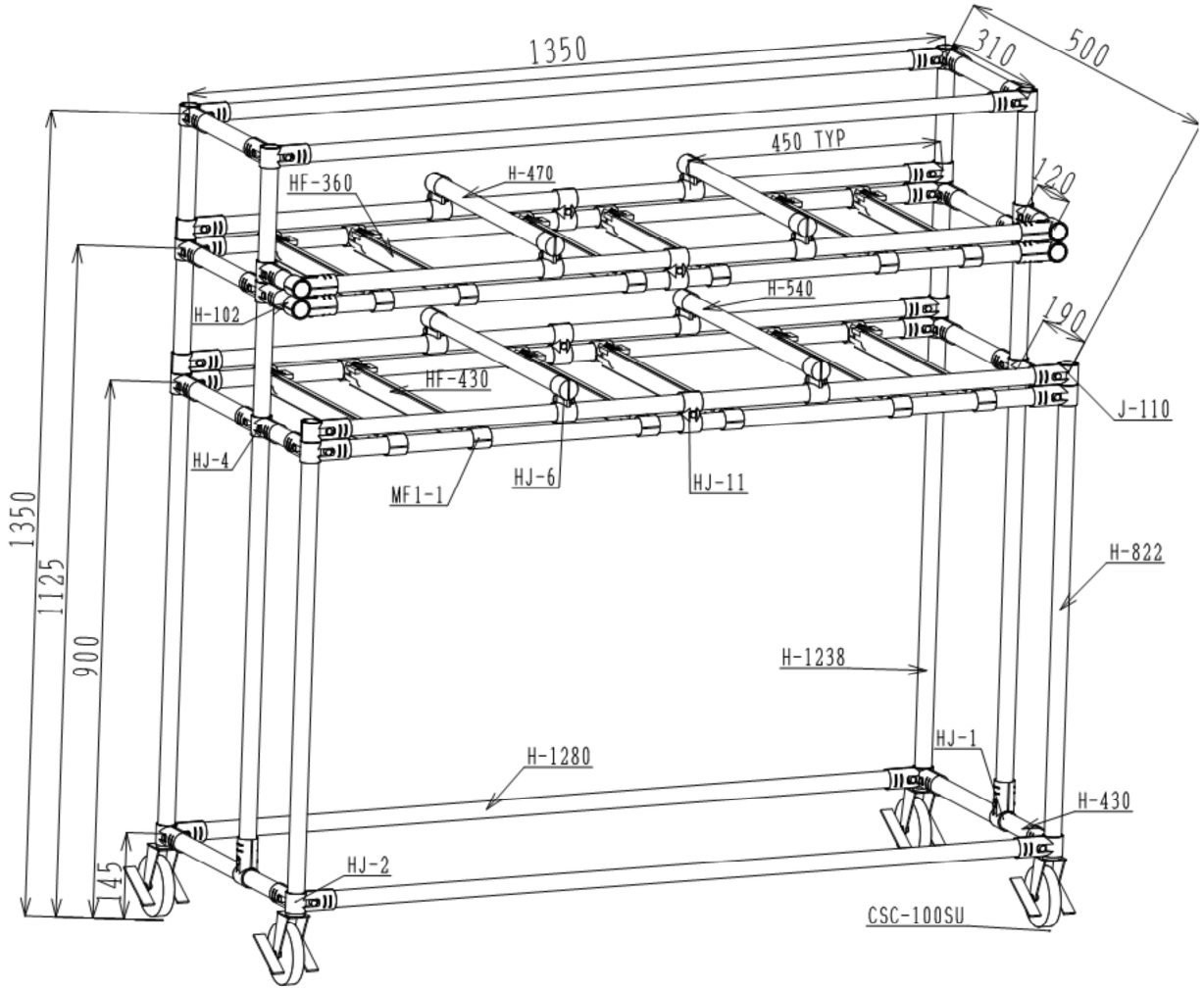

Drawing I made of a car map pocket work station tote storage rack - vendor isometric AutoCAD view.

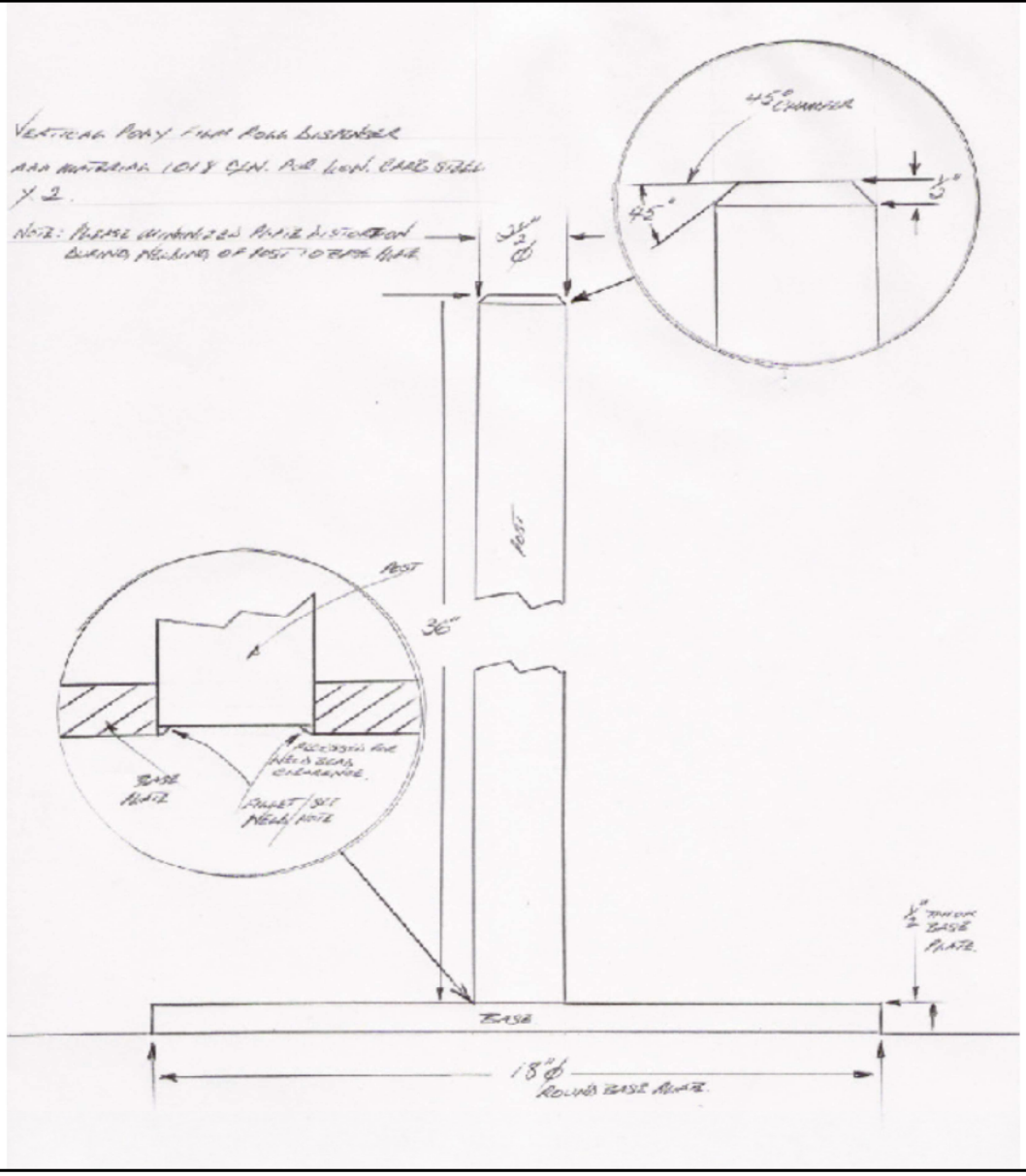

A drawing I made to have some poly film roll stands made. The rolls were 8' feet long and a full roll was heavy and cumbersome to use. This was a 5S effort to get the rolls up off the floor and positioned in a vertical attitude to save space and make easy to use.

I used a Teflon steam flange gasket as a low friction bearing at the base of the stand to permit the roll to rotate easy when being used to dispense a length of poly film for packaging purposes.

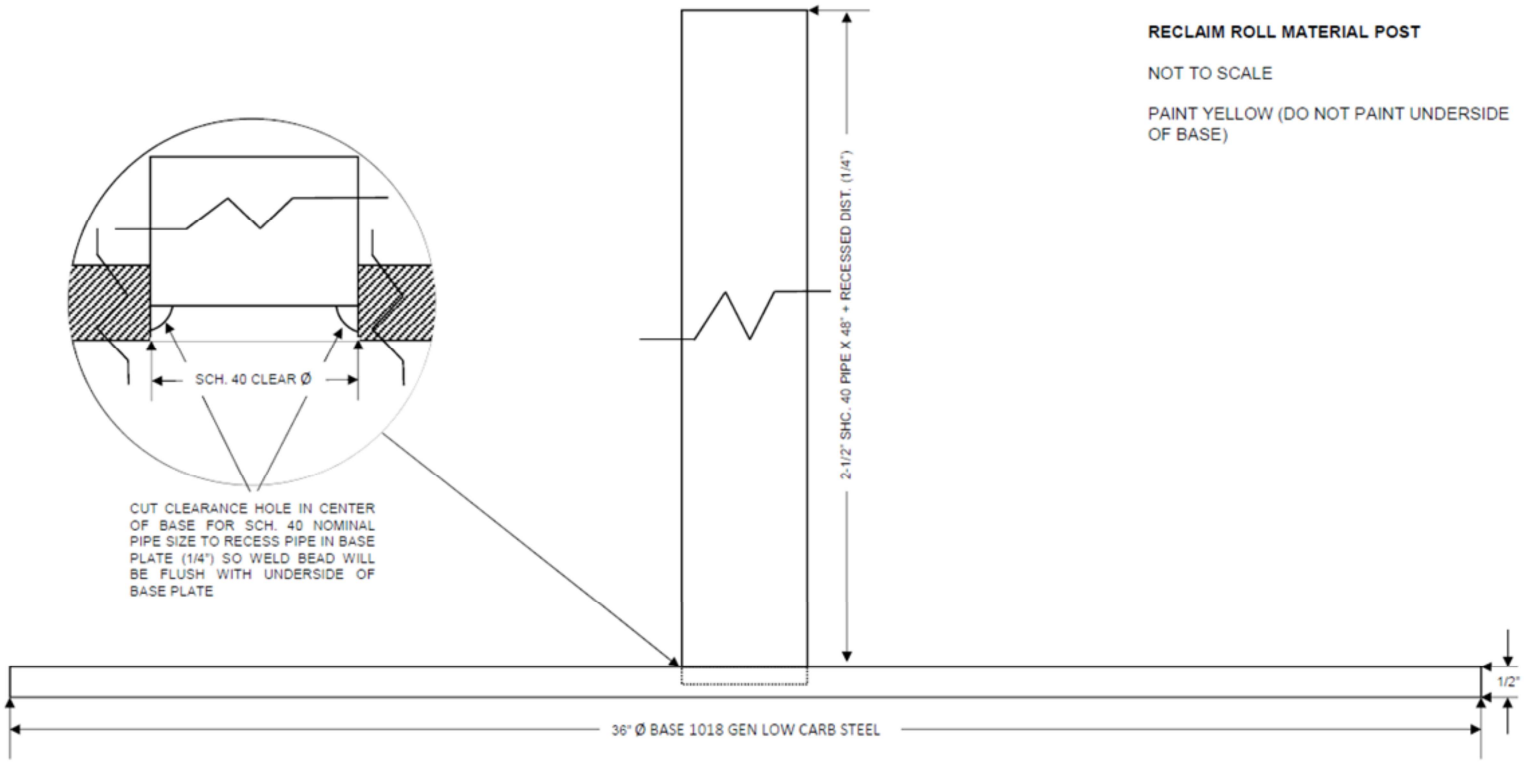

I go on years later to make another one of these stands for another employer to hold reclaim core rolls. Unlike the first drawing which was drafted by hand, this drawing was created in Microsoft Visio Professional 2016.

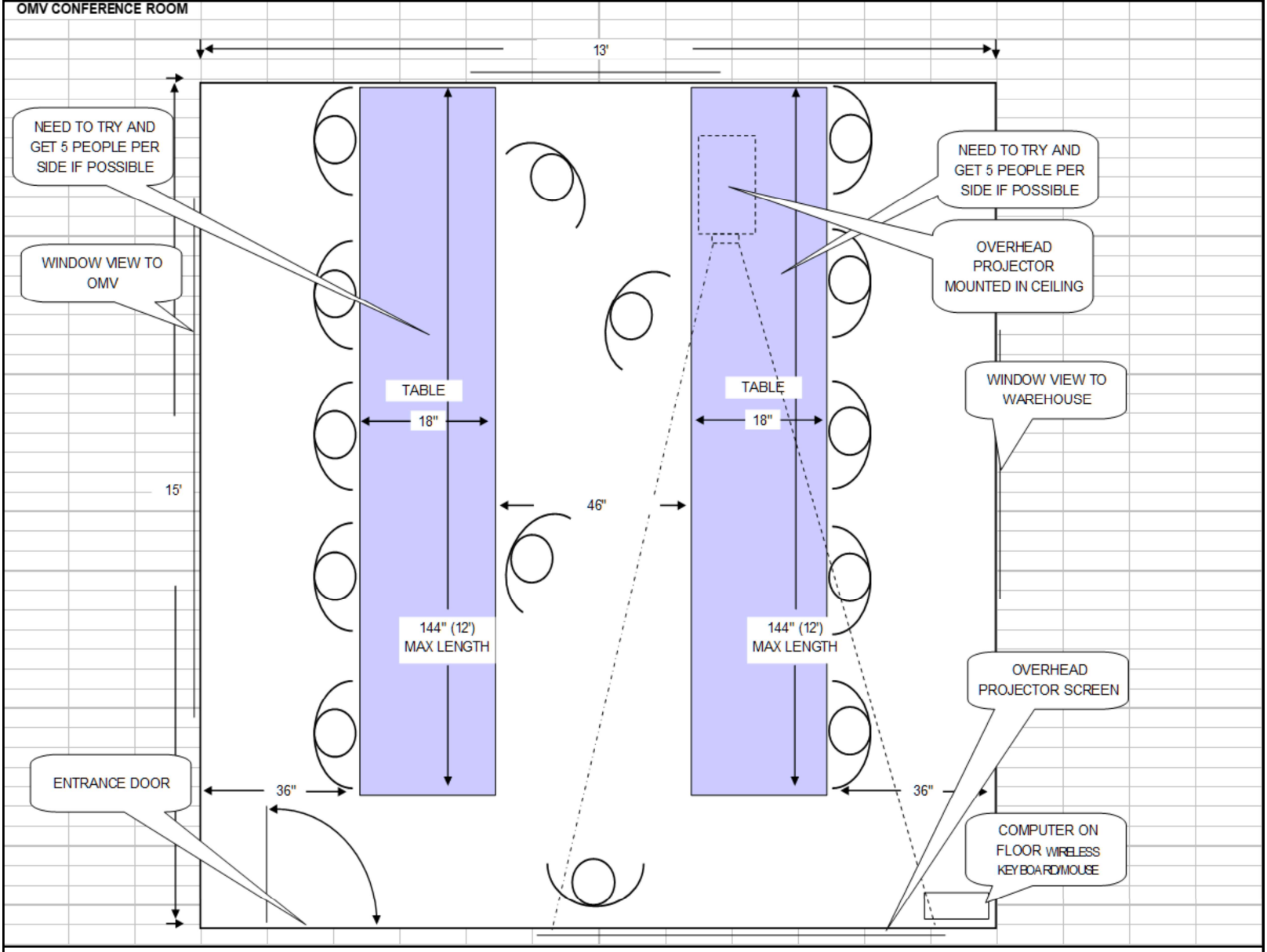

We needed to convert a disused office into a kaizen/meeting/training room. True to any lean project having an idea without a plan is a fantasy. So, here I made a drawing to assess the seating capacity of the room. I went with the next slide configuration.

I also personally purchased and installed the overhead projector, projector pull down screen, storage shelves and the tablet style chairs. This version here only allowed me to get up to 10 people in the room and it didn't facilitate conference style seating for dialogue exchange.

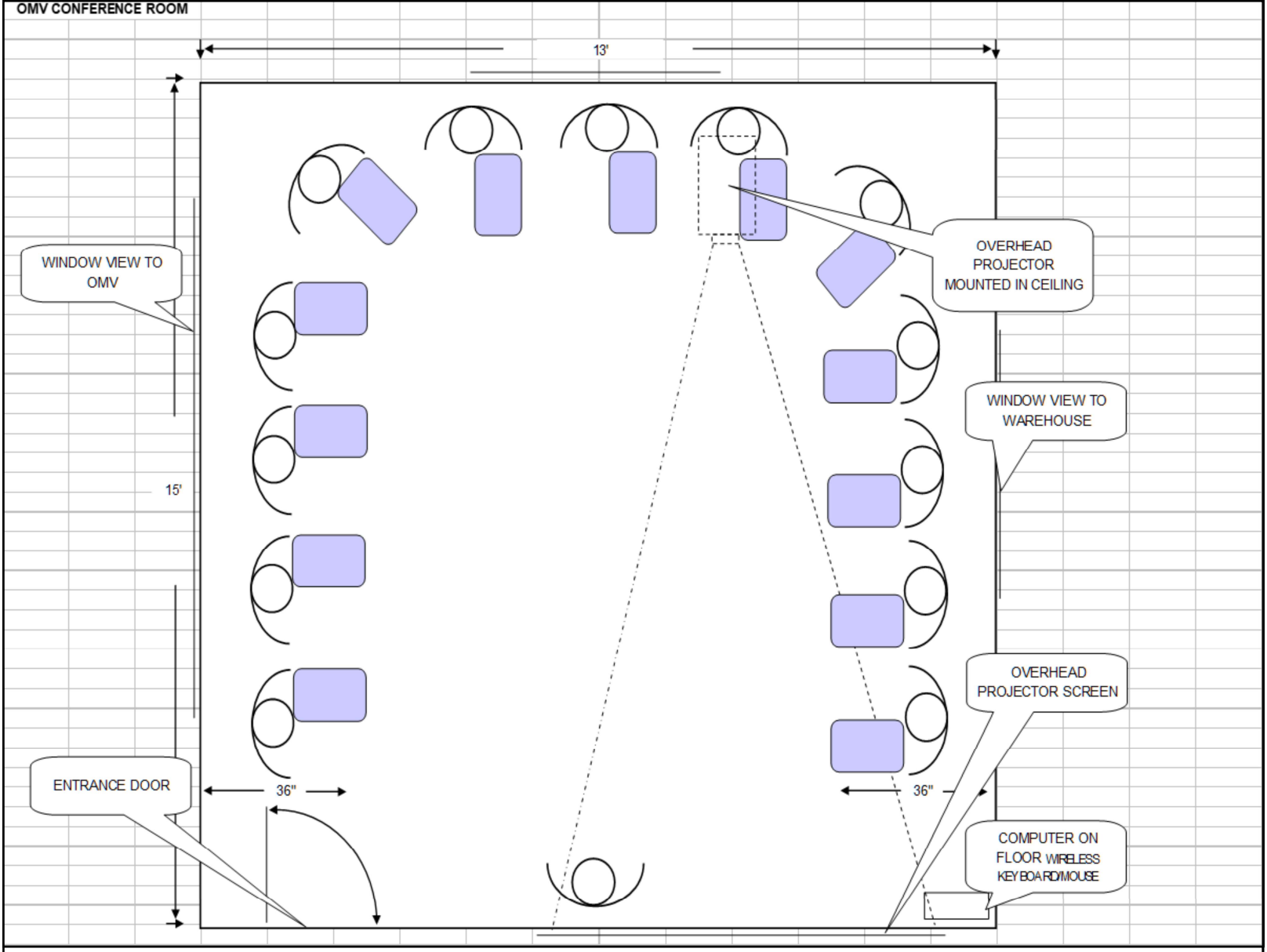

The tables in the previous version took up too much room, so I went with the tablet style chair seating arrangement. This allowed me to get up to 14 people in comfort in the room and it facilitated conference style seating for dialogue exchange.